Project : MT6889, LPDDR4X (SBS)
REF_SCH TOP LEVEL

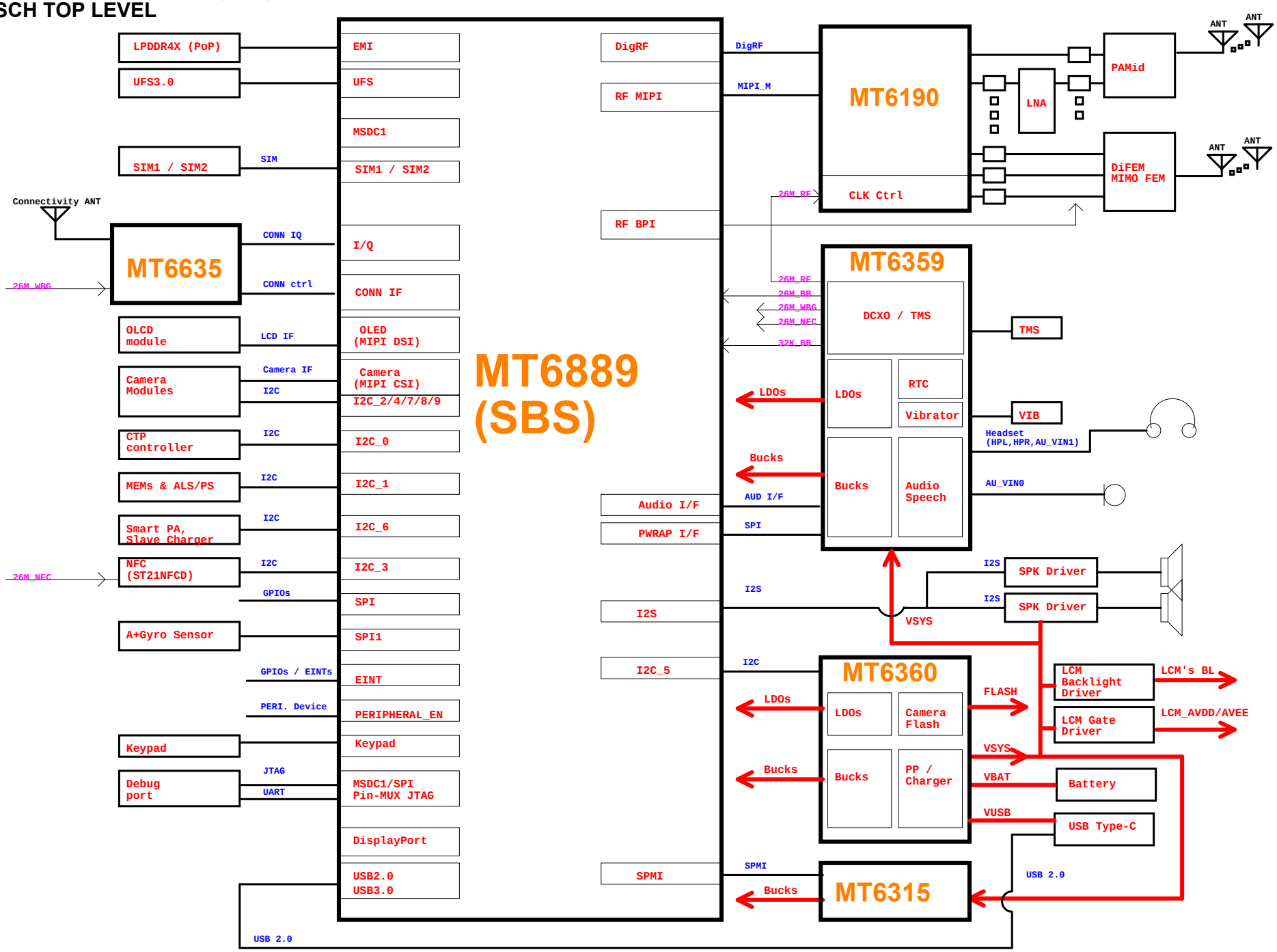

Title	K16_MAIN	
Size C	Document Number Diagram	Rev P0
Date: Tuesday, August 03, 2021	Sheet	

ANT2_LB+N77

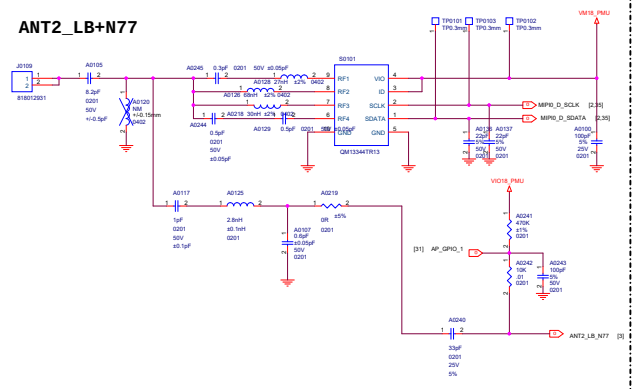

ANT3_MHB

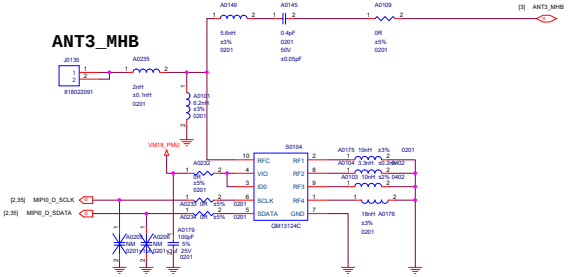

ANT4_N77

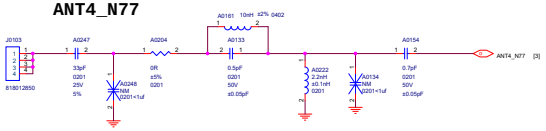

ANT5_MHB

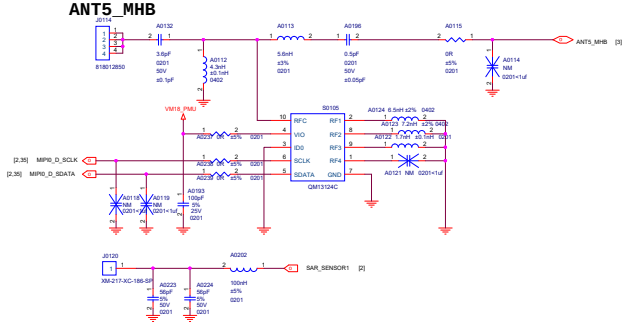

ANT8_GPSL1+WIFI

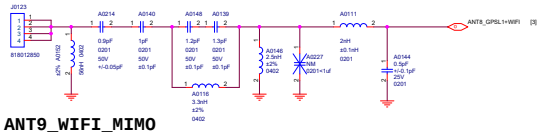

ANT9_WIFI_MIMO

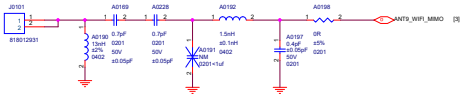

ANT10_N41

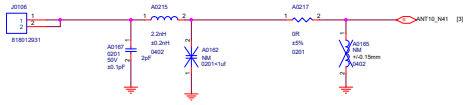

ANT6_N77

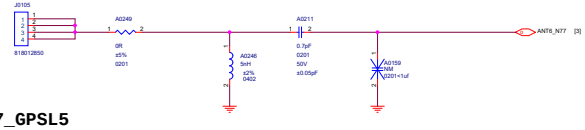

ANT7_GPSL5

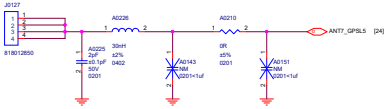

MAIN PCB GND

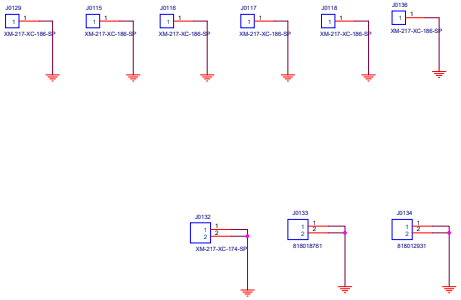

SAR Sensor

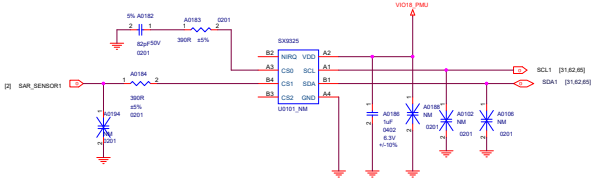

ANT11_N41_N77

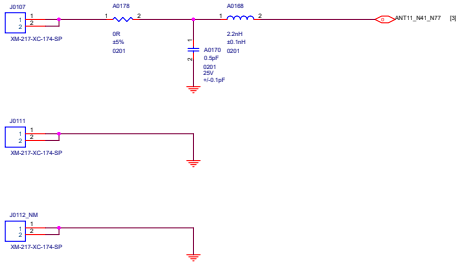

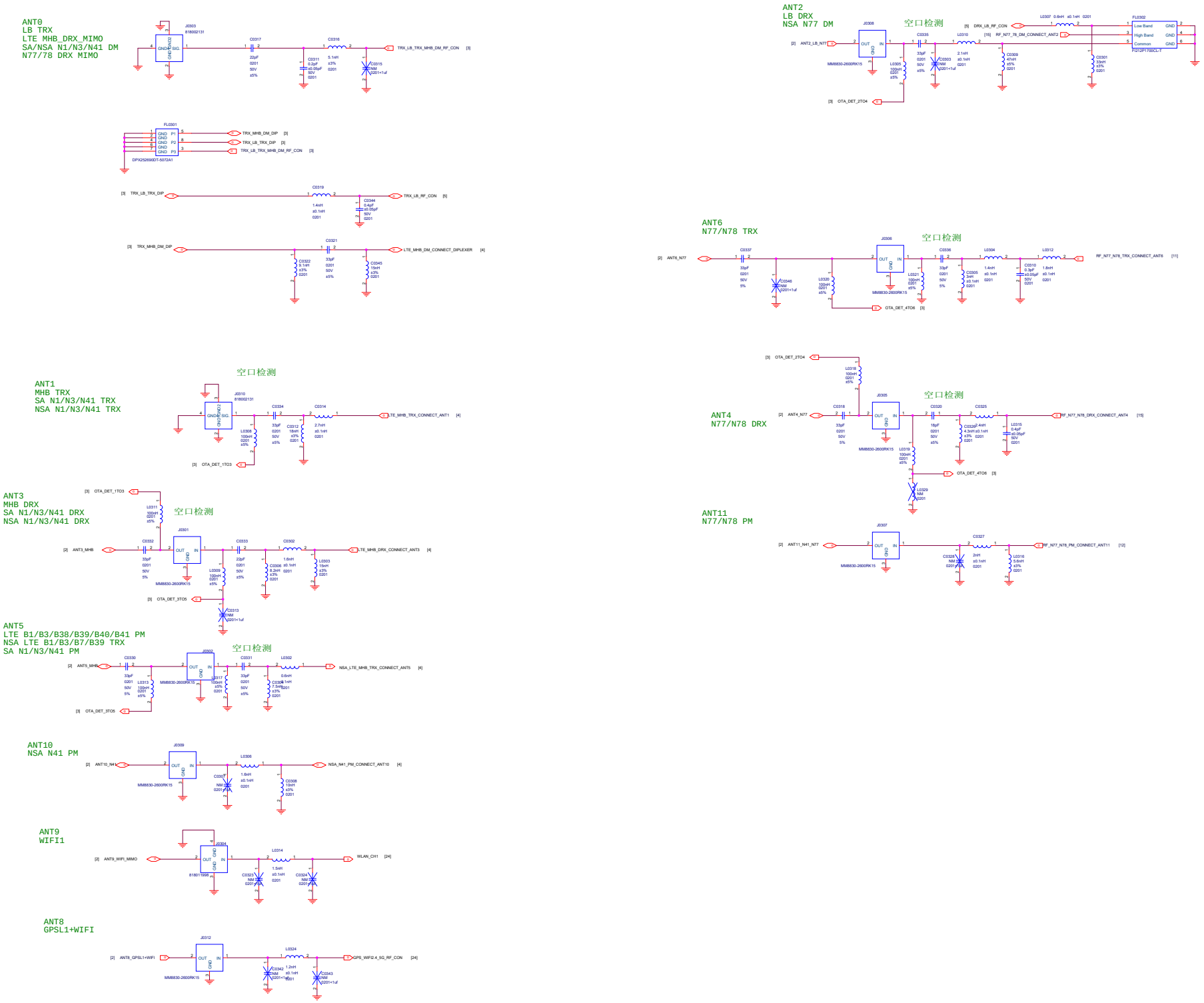
ANT0
LB TRX
LTE MHB_DRX_MIMO
SA/NSA N1/N3/N41 DM
N77/78 DRX MIMO
J0303
818002131
C0317
22pF
0201
50V
±5%
C0316
5.1nH
±3%
0201
C0311
0.2pF
±0.05pF
50V
0201
C0315
NM
0201+1uF
TRX_LB_TRX_MHB_DM_RF_CON [3]
FL0301
DP2S2569X0T-5072A1
TRX_MHB_DM_DIP [3]
TRX_LB_TRX_DIP [3]
TRX_LB_TRX_MHB_DM_RF_CON [3]
C0319
1.4nH
±0.1nH
0201
C0344
0.4pF
±0.05pF
50V
0201
TRX_LB_TRX_DIP [3]
TRX_LB_RF_CON [5]
C0321
33pF
0201
50V
±5%
C0322
9.1nH
±3%
0201
C0345
15nH
±3%
0201
TRX_MHB_DM_DIP [3]
LTE_MHB_DM_CONNECT_DIPLEXER [4]
ANT1
MHB TRX
SA N1/N3/N41 TRX
NSA N1/N3/N41 TRX
空口检测
J0310
818002131
C0334
33pF
0201
50V
±5%
C0314
2.7nH
±0.1nH
0201
L0306
100nH
0201
±5%
C0312
18nH
±3%
0201
LTE_MHB_TRX_CONNECT_ANT1 [4]
OTA_DET_1TO3 [3]
ANT3
MHB DRX
SA N1/N3/N41 DRX
NSA N1/N3/N41 DRX
OTA_DET_1TO3 [3]
L0311
100nH
0201
±5%
空口检测
J0301
C0332
33pF
0201
50V
5%
ANT3_MHB [2]
MMB830-2600RK15
C0333
22pF
0201
50V
±5%
C0302
1.6nH
±0.1nH
0201
C0306
8.2nH
±3%
0201
L0303
15nH
±3%
0201
L0309
100nH
0201
±5%
LTE_MHB_DRX_CONNECT_ANT3 [4]
OTA_DET_3TO5 [3]
C0313
NM
0201+1uF
ANT5
LTE B1/B3/B38/B39/B40/B41 PM
NSA LTE B1/B3/B7/B39 TRX
SA N1/N3/N41 PM
空口检测
J0302
C0330
33pF
0201
50V
5%
L0313
100nH
0201
±5%
ANT5_MHB [2]
MMB830-2600RK15
C0331
33pF
0201
50V
±5%
L0302
0.6nH
±0.1nH
0201
C0304
7.5nH
±3%
0201
L0317
100nH
0201
±5%
NSA_LTE_MHB_TRX_CONNECT_ANT5 [4]
OTA_DET_3TO5 [3]
ANT10
NSA N41 PM
J0309
ANT10_N41 [2]
MMB830-2600RK15
L0306
1.8nH
±0.1nH
0201
C0307
NM
0201
C0308
10nH
±3%
0201
NSA_N41_PM_CONNECT_ANT10 [4]
ANT9
WIFI1
J0304
ANT9_WIFI_MIMO [2]
818017998
L0314
1.5nH
±0.1nH
0201
C0323
NM
0201
C0324
NM
0201
WLAN_CH1 [24]
ANT8
GPSL1+WIFI
J0312
ANT8_GPSL1+WIFI [2]
MMB830-2600RK15
L0324
1.2nH
±0.1nH
0201
C0342
NM
0201+1uF
C0343
NM
0201+1uF
GPS_WIFI2.4_5G_RF_CON [24]
ANT2
LB DRX
NSA N77 DM
空口检测
J0308
ANT2_LB_N77 [2]
MMB830-2600RK15
C0335
33pF
0201
50V
±5%
C0303
NM
0201+1uF
L0305
100nH
0201
±5%
OTA_DET_2TO4 [3]
L0310
2.1nH
±0.1nH
0201
DRX_LB_RF_CON [5]
RF_N77_78_DM_CONNECT_ANT2 [15]
L0307 0.8nH ±0.1nH 0201
C0309
47nH
±5%
0201
C0301
13nH
±3%
0201
FL0302
Low Band
High Band
Common
GND
FI212P1700CL-T
ANT6
N77/N78 TRX
空口检测
J0306
ANT6_N77 [2]
C0337
33pF
0201
50V
5%
C0346
NM
0201+1uF
L0320
100nH
0201
±5%
MMB830-2600RK15
C0336
33pF
0201
50V
5%
L0321
100nH
0201
±5%
L0304
1.4nH
±0.1nH
0201
C0305
8nH
±0.1nH
0201
L0312
1.8nH
±0.1nH
0201
C0310
0.3pF
±0.05pF
50V
0201
RF_N77_N78_TRX_CONNECT_ANT6 [11]
OTA_DET_4TO6 [3]
ANT4
N77/N78 DRX
OTA_DET_2TO4 [3]
L0318
100nH
0201
±5%
空口检测
J0305
ANT4_N77 [2]
C0318
33pF
0201
50V
5%
MMB830-2600RK15
C0320
18pF
0201
50V
±5%
C0325
2.4nH
±0.1nH
0201
C0326
4.3nH
±3%
0201
L0315
0.4pF
±0.05pF
50V
0201
L0319
100nH
0201
±5%
RF_N77_N78_DRX_CONNECT_ANT4 [15]
OTA_DET_4TO6 [3]
L0329
NM
0201
ANT11
N77/N78 PM
J0307
ANT11_N41_N77 [2]
MMB830-2600RK15
C0327
2nH
±0.1nH
0201
C0328
NM
0201
L0316
5.6nH
±3%
0201
RF_N77_N78_PM_CONNECT_ANT11 [12]

3P3T_#1_Up

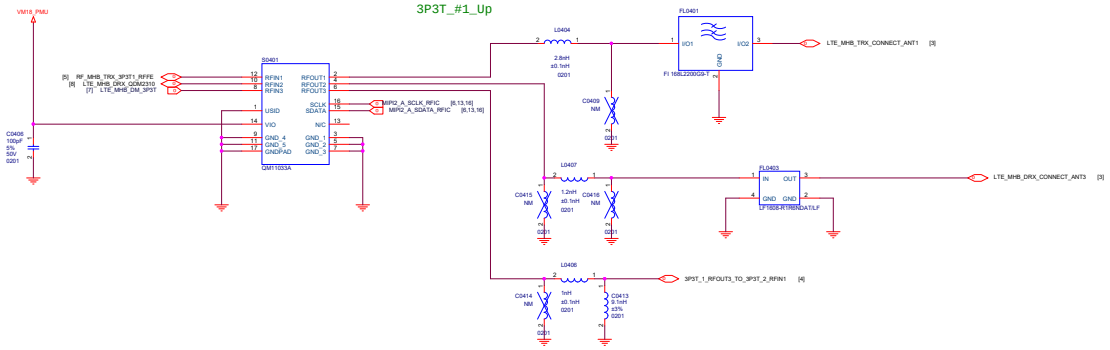

3P3T_#2_Down

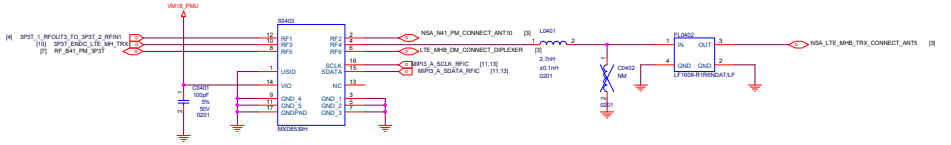

Ph5N_TXM+GSM_PA

2G/3G/4G/5G_TRX_TXM

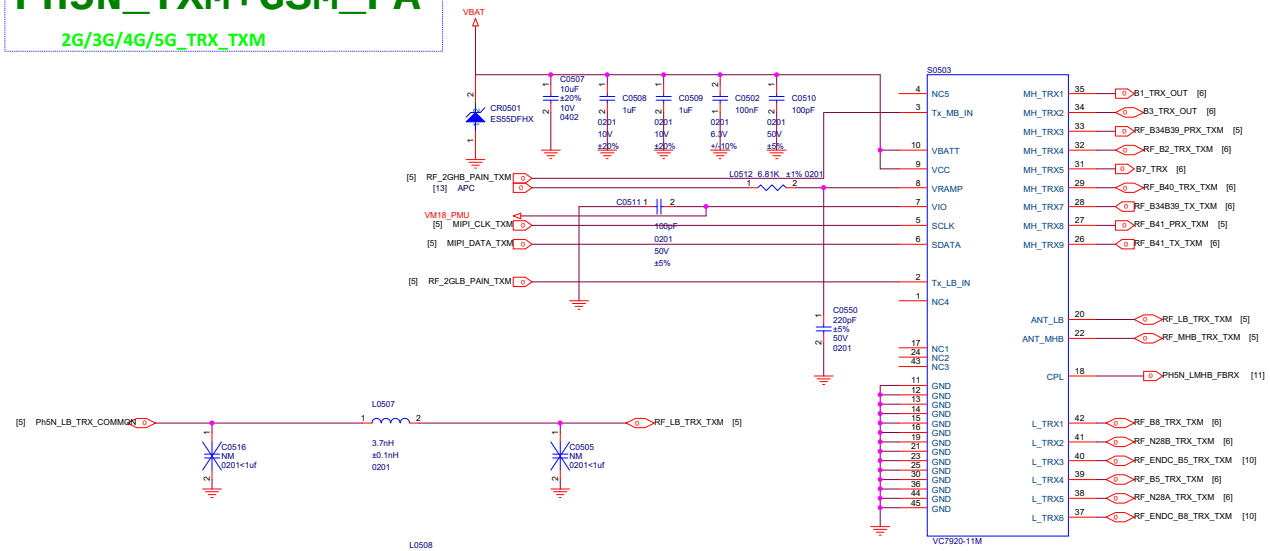

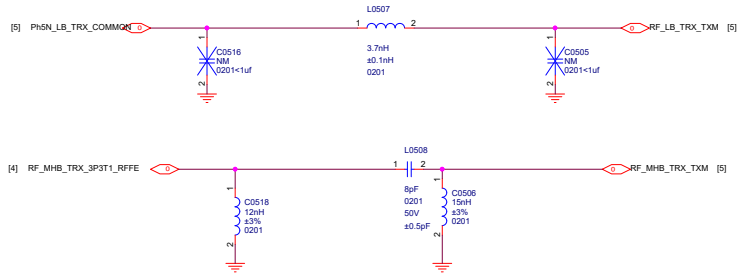

GSM PA_IN MATCH

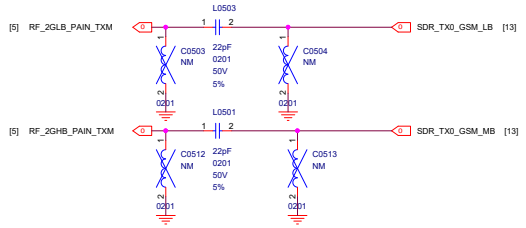

TXM MIPI CTRL

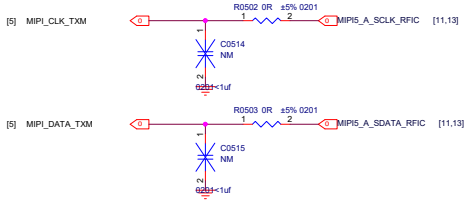

B41 PRX

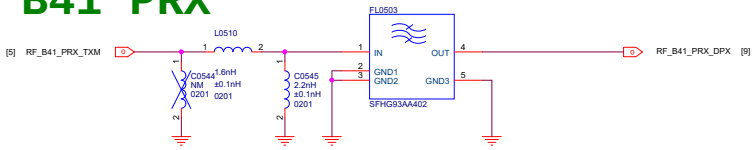

B34 B39 PRX

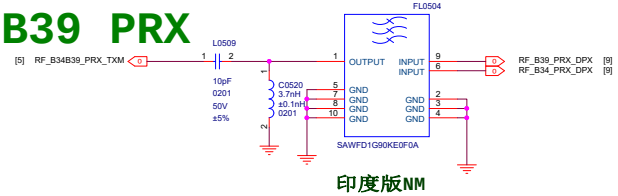

印度版NM

LB TAS DPDT

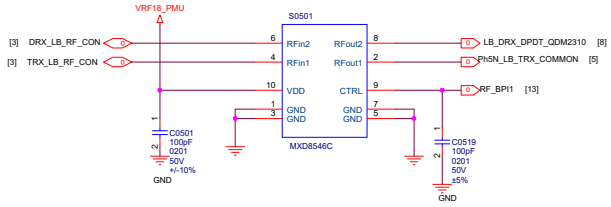

Title	MT6873_5GA	
Size	Document Number	Rev
A2	MT6893_GPIO_1	
Date:	Sheet	

Tuesday, August 03, 2021

4G MMMBPA VC7643-63M

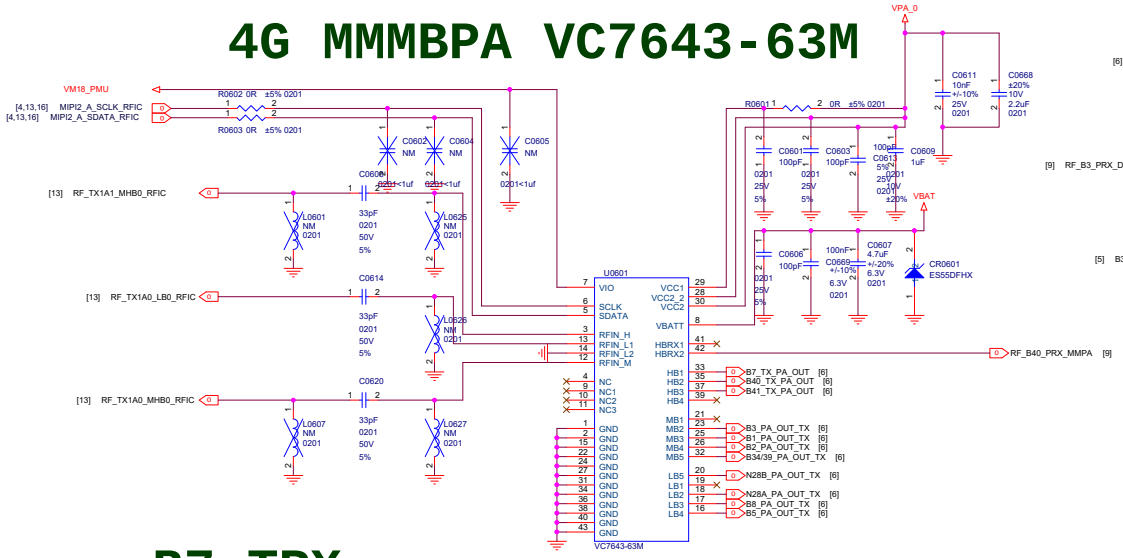

B1B3 TRX

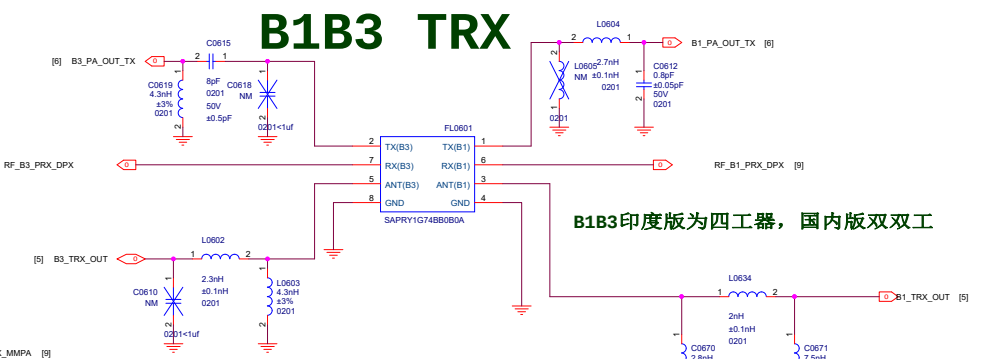

B1B3印度版为四工器，国内版双双工

B2 TRX

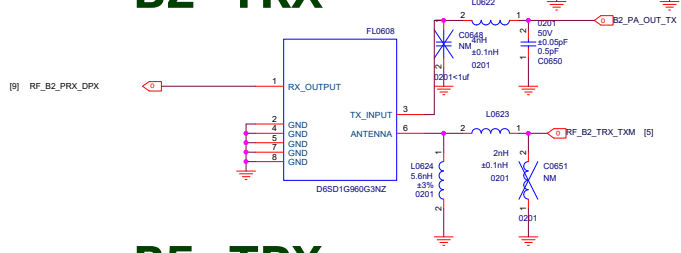

B7 TRX

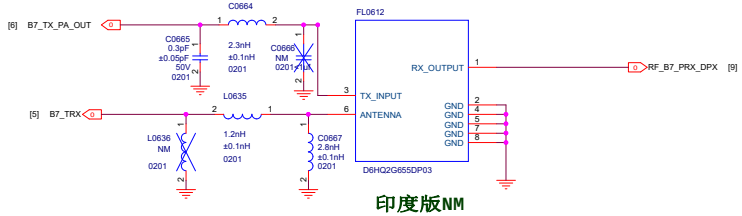

印度版NM

B5 TRX

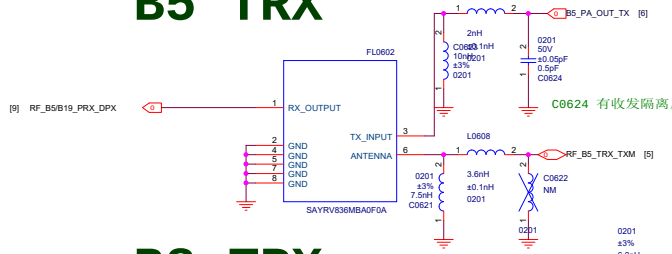

C0624 有收发隔离风险，不推荐使用

B38/B41 TX

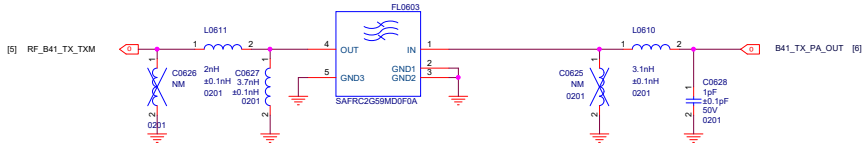

B8 TRX

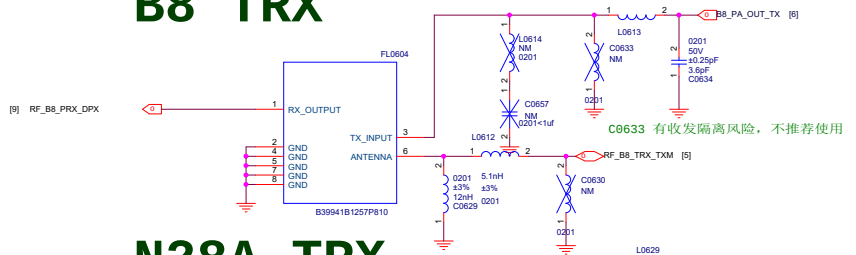

C0633 有收发隔离风险，不推荐使用

B40 TRX

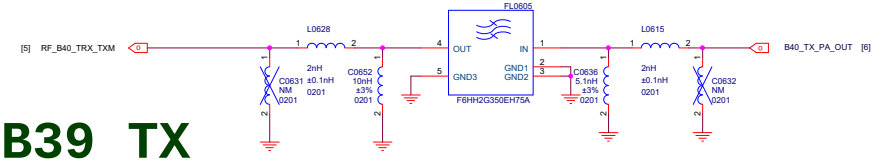

B34/B39 TX

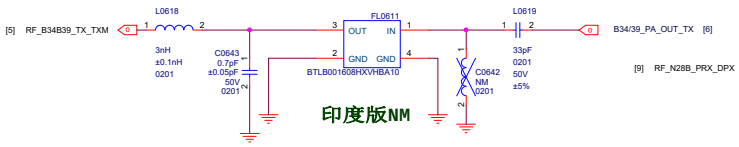

印度版NM

N28B TRX

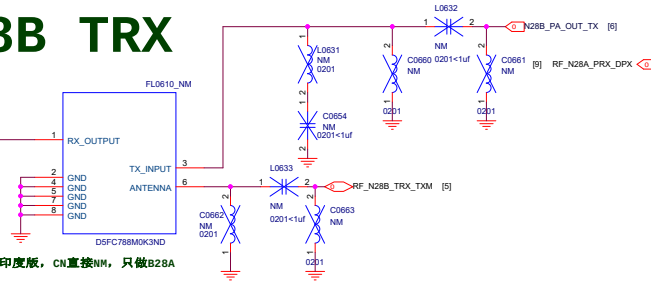

SPDT 与B28B的双工为印度版，CN直接NM，只做B28A

N28A TRX

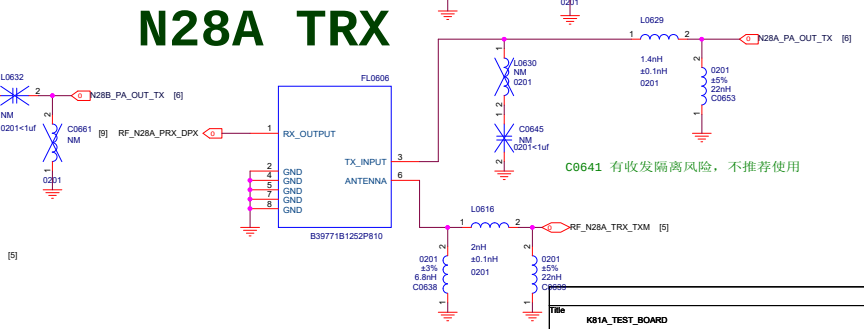

C0641 有收发隔离风险，不推荐使用

Title	K81A_TEST_BOARD	
Size A2	Document Number PM8658 Charger	Rev P0
Date: Tuesday, August 03, 2021	Sheet	

* * * * * * * * * * * * *PRX MIMO* * * * * * * * * * * * * * *

B41 PRX MIMO

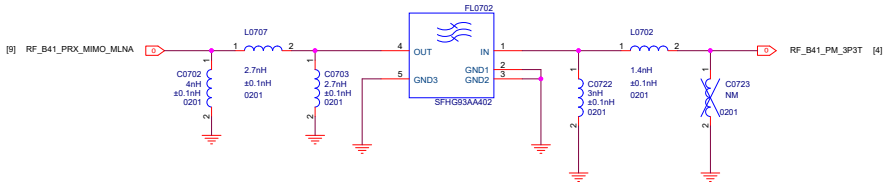

* * * * * * * * * * * * *DRX MIMO* * * * * * * * * * * * * * *

B41 DRX MIMO CN
B40 RX SAW INDIA

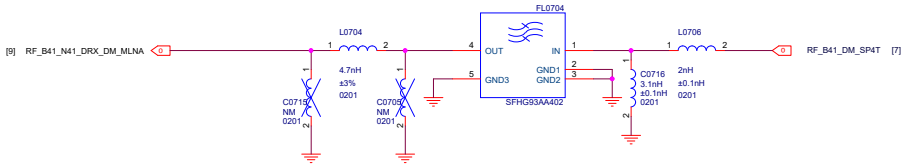

CN为B41 RX SAW,印度为B40 RX SAW

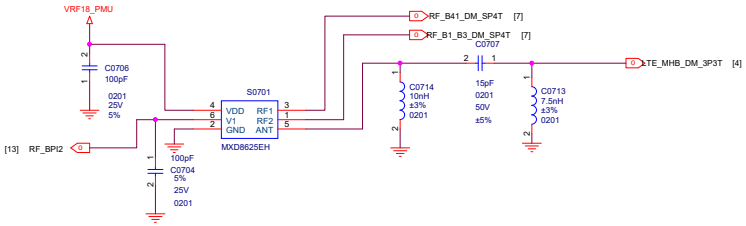

B1_B3_DRX MIMO

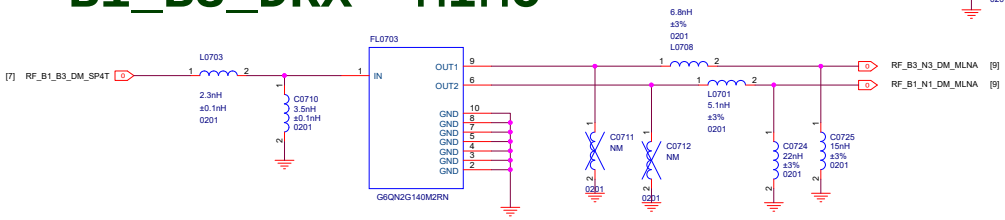

Title	K81A_TEST_BOARD	
Size A2	Document Number PM855B Charger	Rev P0
Date: Tuesday, August 03, 2021	Sheet	

DiFEM QDM2310

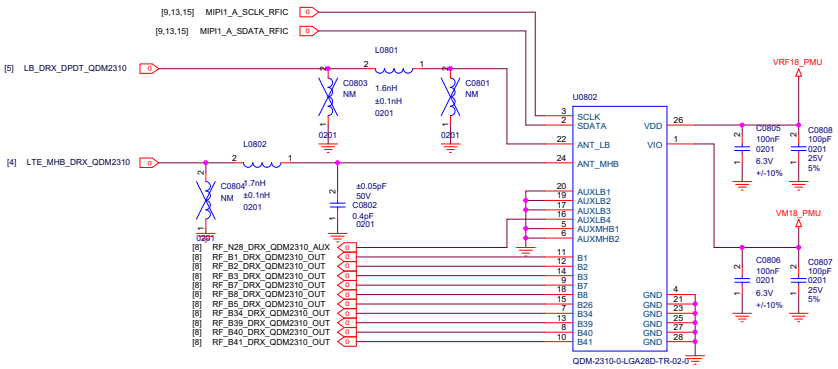

N28 DRX

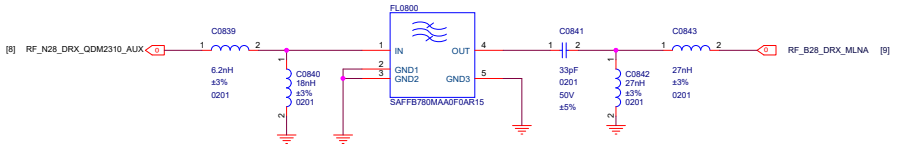

DRX HB

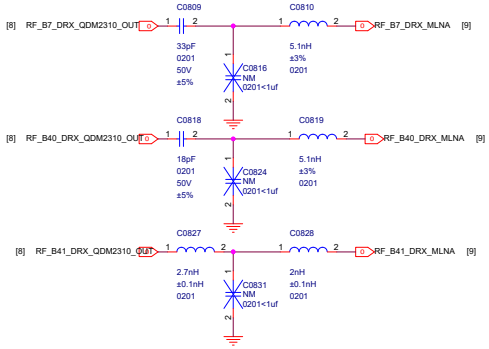

DRX MB

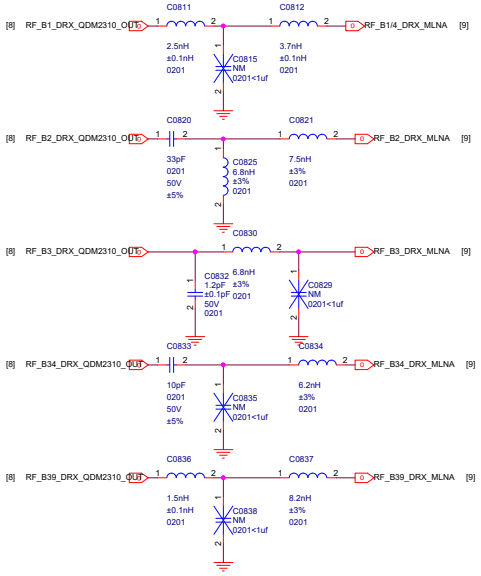

DRX LB

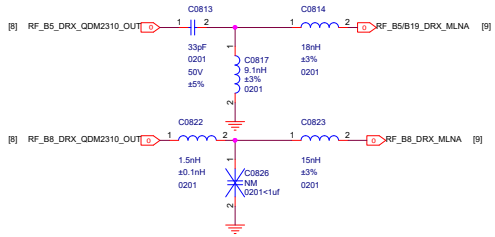

Title	MT8883_5GL	
Size A2	Document Number DRX	Rev P0
Date: Tuesday, August 03, 2021	Sheet of	

PRX LNA-Bank MXD83K5A Matching

MHB PRX

PRX HB

PRX MB

PRX LB

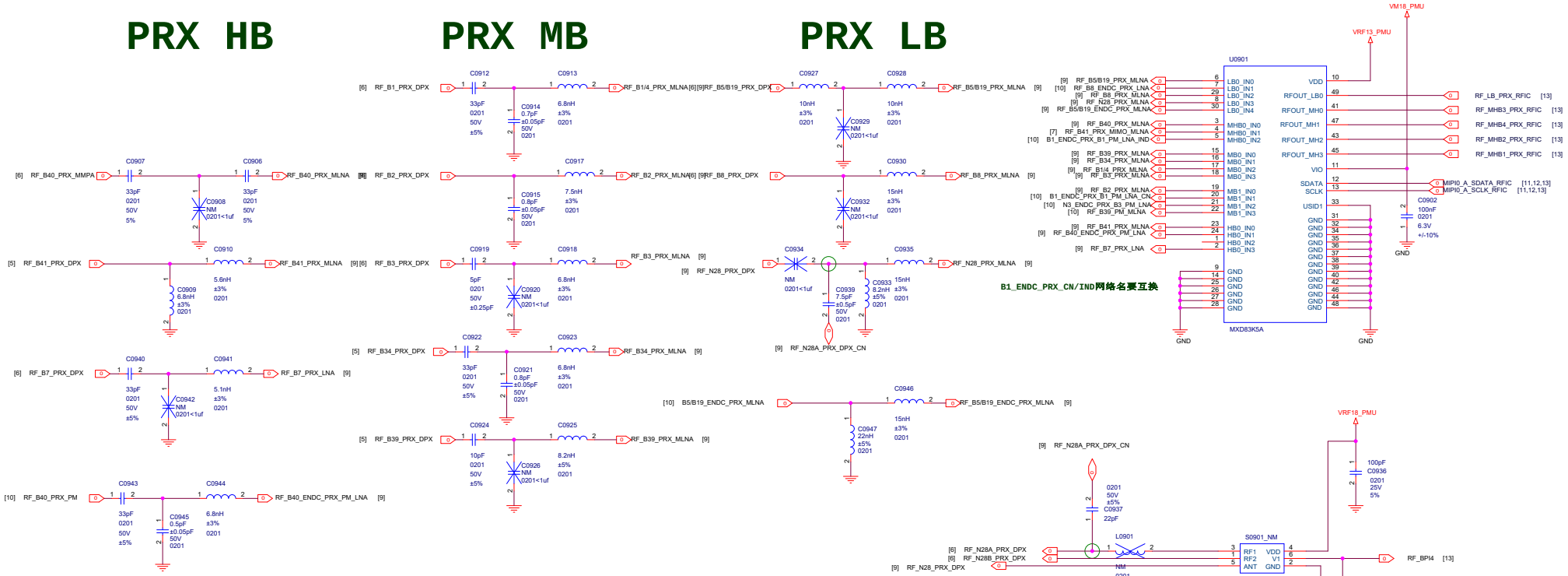

MHB DRX

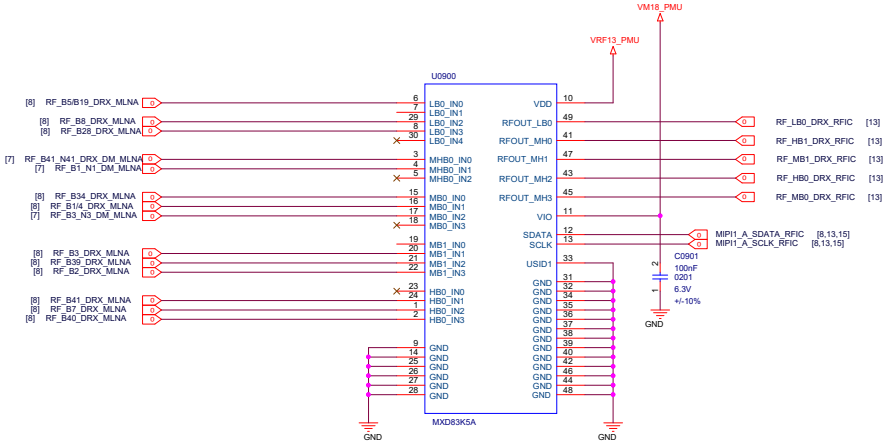

Title	MT6883_5GL		
Size A2	Document Number DRX_LNA		Rev P0
Date: Tuesday, August 03, 2021	Sheet	of	

ENDC PA

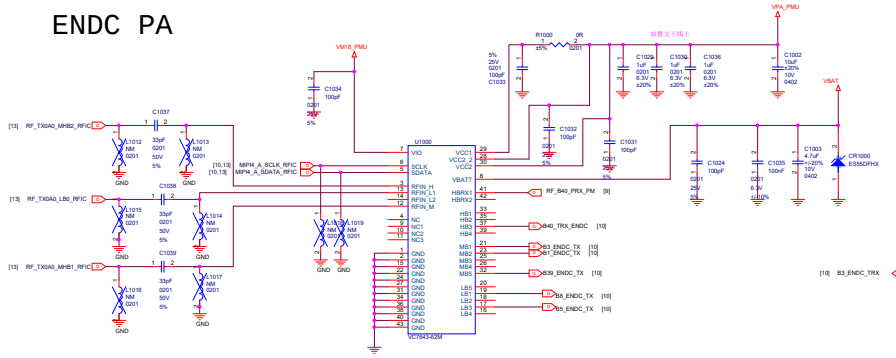

B1/3 TRX

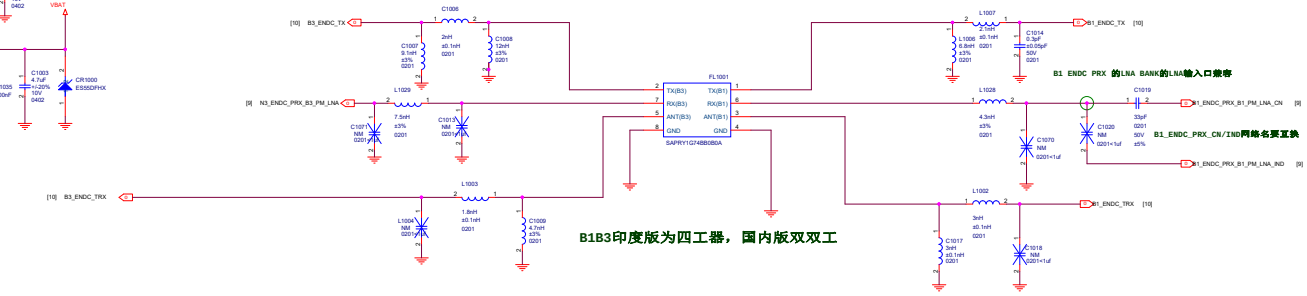

B1B3印度版为四工器，国内版双双工

B34/B39 TX

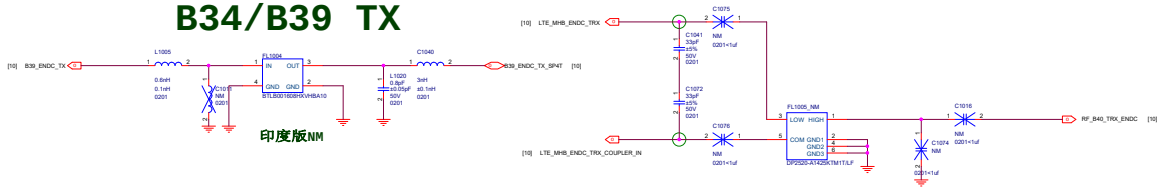

印度版NM

印度版B40 有mimo，CN为NM

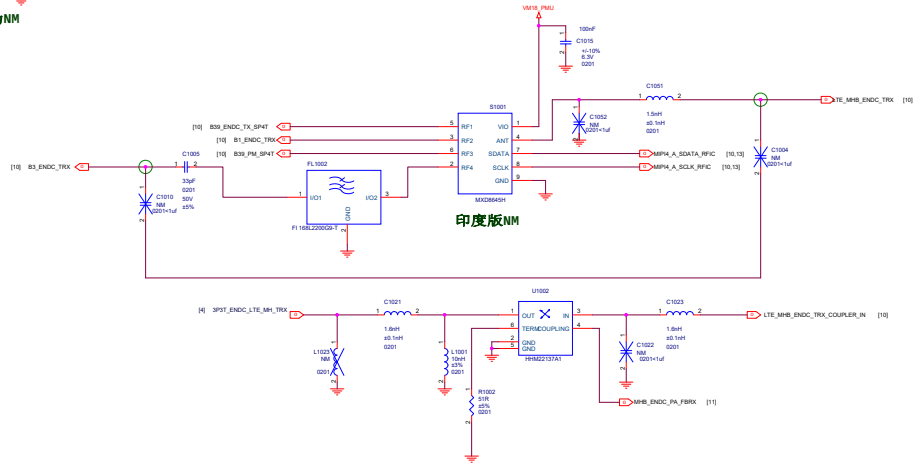

印度版NM

B5/B19 TRX

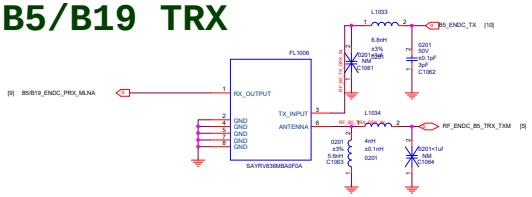

B8 TRX

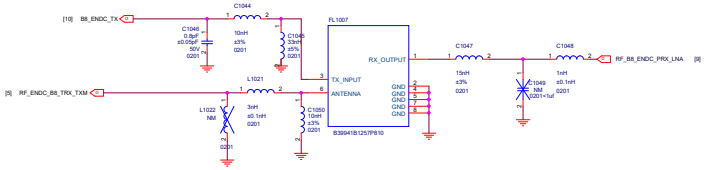

B39 RX

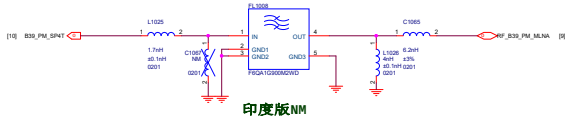

印度版NM

B40 TRX ENDC

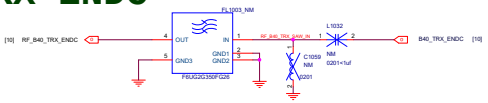

印度版B40 有mimo，CN为NM

NR N77/N78 PAMID

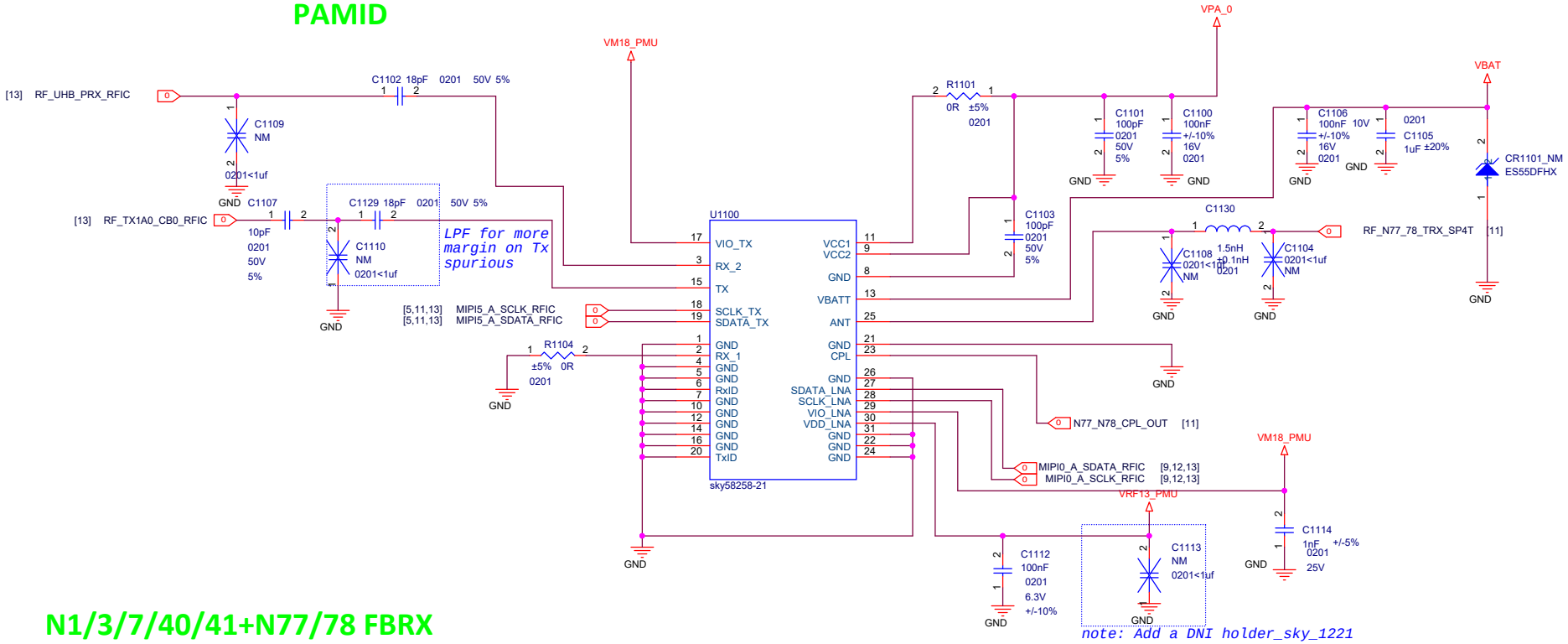

N1/3/7/40/41+N77/78 FBRX

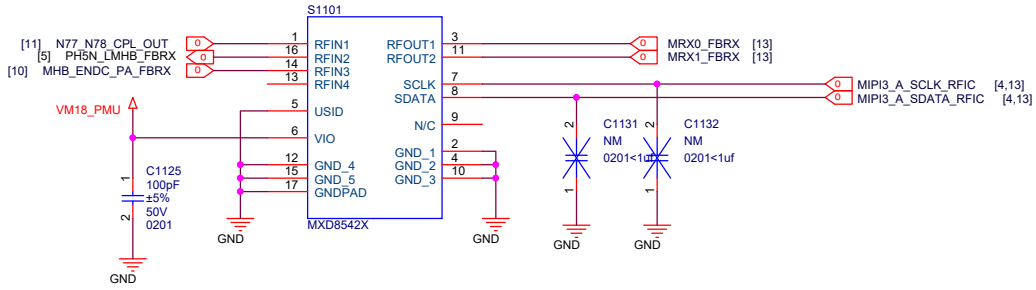

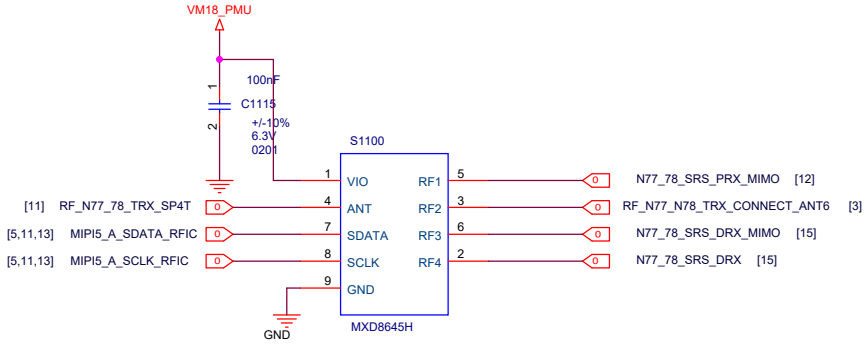

MI PHONE		
Title: MT6883_5GL		
Size: A3	Document Number: PA_5G_N41	Rev: P0
Date: Tuesday, August 03, 2021	Sheet of	

NR N77/N78 PRx-MIMO LFEM

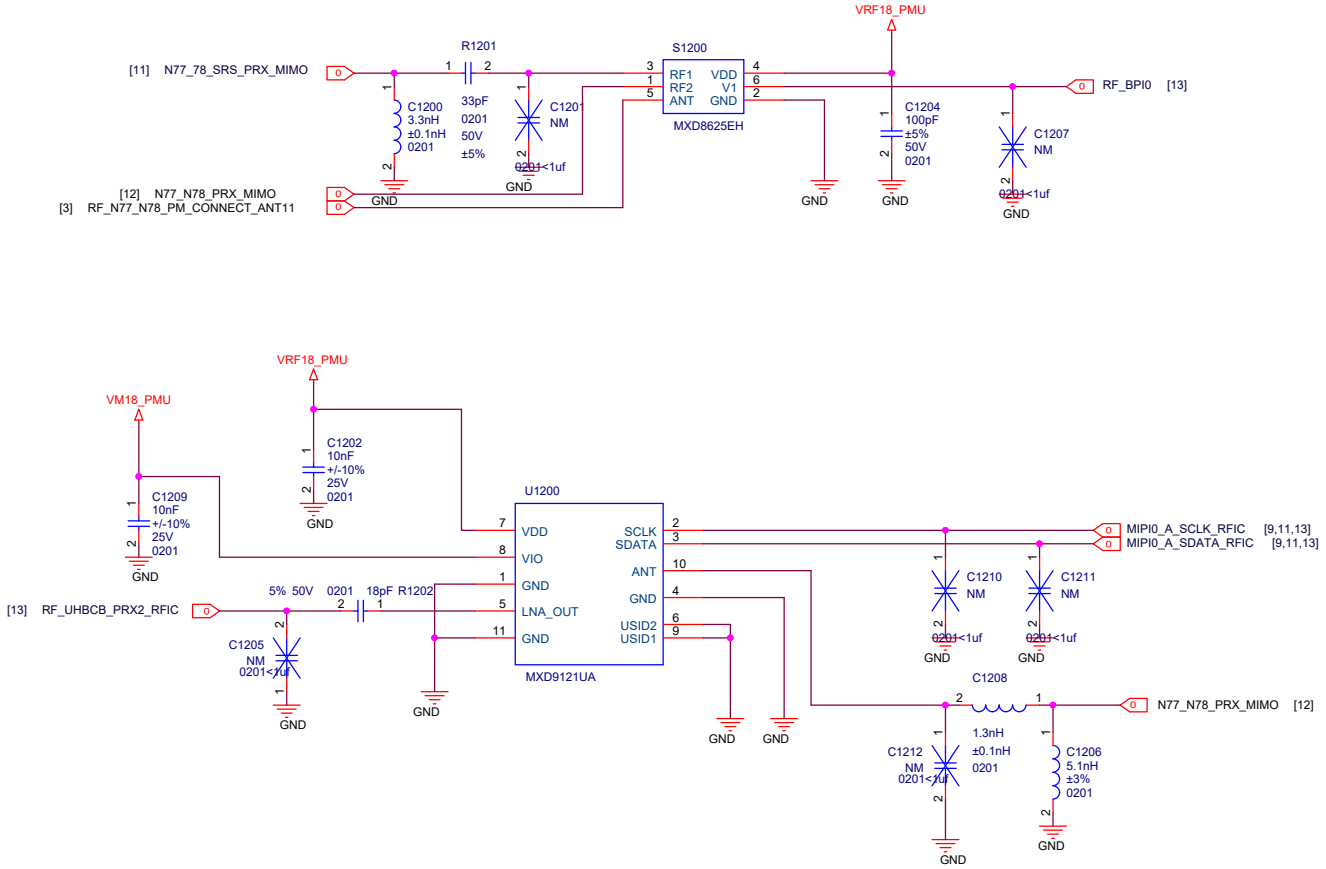

MI PHONE		
Title	MT6883_5GL	
Size A3	Document Number PA_5G_N41	Rev P0
Date: Tuesday, August 03, 2021	Sheet of	

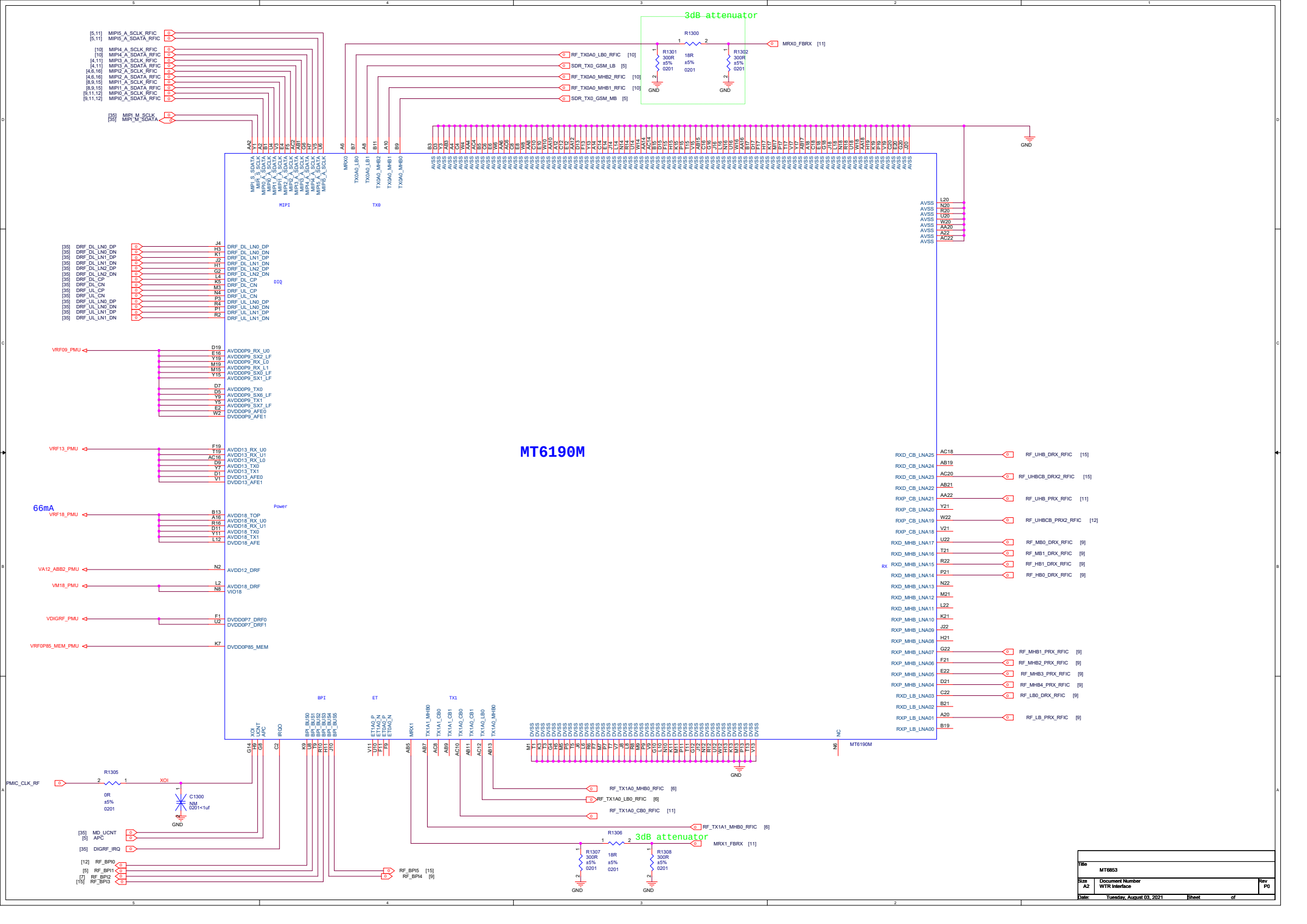
MT6190M
3dB attenuator
R1300
R1301
300R
±5%
0201
18R
R1302
300R
MRX0_FBRX [11]
RF_TX0A0_LB0_RFIC [10]
SDR_TX0_GSM_LB [5]
RF_TX0A0_MHB2_RFIC [10]
RF_TX0A0_MHB1_RFIC [10]
SDR_TX0_GSM_MB [5]
MIPI
TX0
DIQ
Power
BPI
ET
TX1
RX
66mA
VRF09_PMU
VRF13_PMU
VRF18_PMU
VA12_ABB2_PMU
VM18_PMU
VDIGRF_PMU
VRF0P85_MEM_PMU
PMIC_CLK_RF
R1305
0R
XOI
C1300
NM
0201<1uf
MD_UCNT
APC
DIGRF_IRQ
RF_BPI0
RF_BPI1
RF_BPI2
RF_BPI3
RF_BPI5 [15]
RF_BPI4 [9]
RF_TX1A0_MHB0_RFIC [6]
RF_TX1A0_LB0_RFIC [6]
RF_TX1A0_CB0_RFIC [11]
RF_TX1A1_MHB0_RFIC [6]
R1306
R1307
R1308
MRX1_FBRX [11]
RF_UHB_DRX_RFIC [15]
RF_UHBCB_DRX2_RFIC [15]
RF_UHB_PRX_RFIC [11]
RF_UHBCB_PRX2_RFIC [12]
RF_MB0_DRX_RFIC [9]
RF_MB1_DRX_RFIC [9]
RF_HB1_DRX_RFIC [9]
RF_HB0_DRX_RFIC [9]
RF_MHB1_PRX_RFIC [9]
RF_MHB2_PRX_RFIC [9]
RF_MHB3_PRX_RFIC [9]
RF_MHB4_PRX_RFIC [9]
RF_LB0_DRX_RFIC [9]
RF_LB_PRX_RFIC [9]
GND
Title
MT6853
Size
A2
Document Number
WTR Interface
Rev
P0
Date:
Tuesday, August 03, 2021
Sheet
of

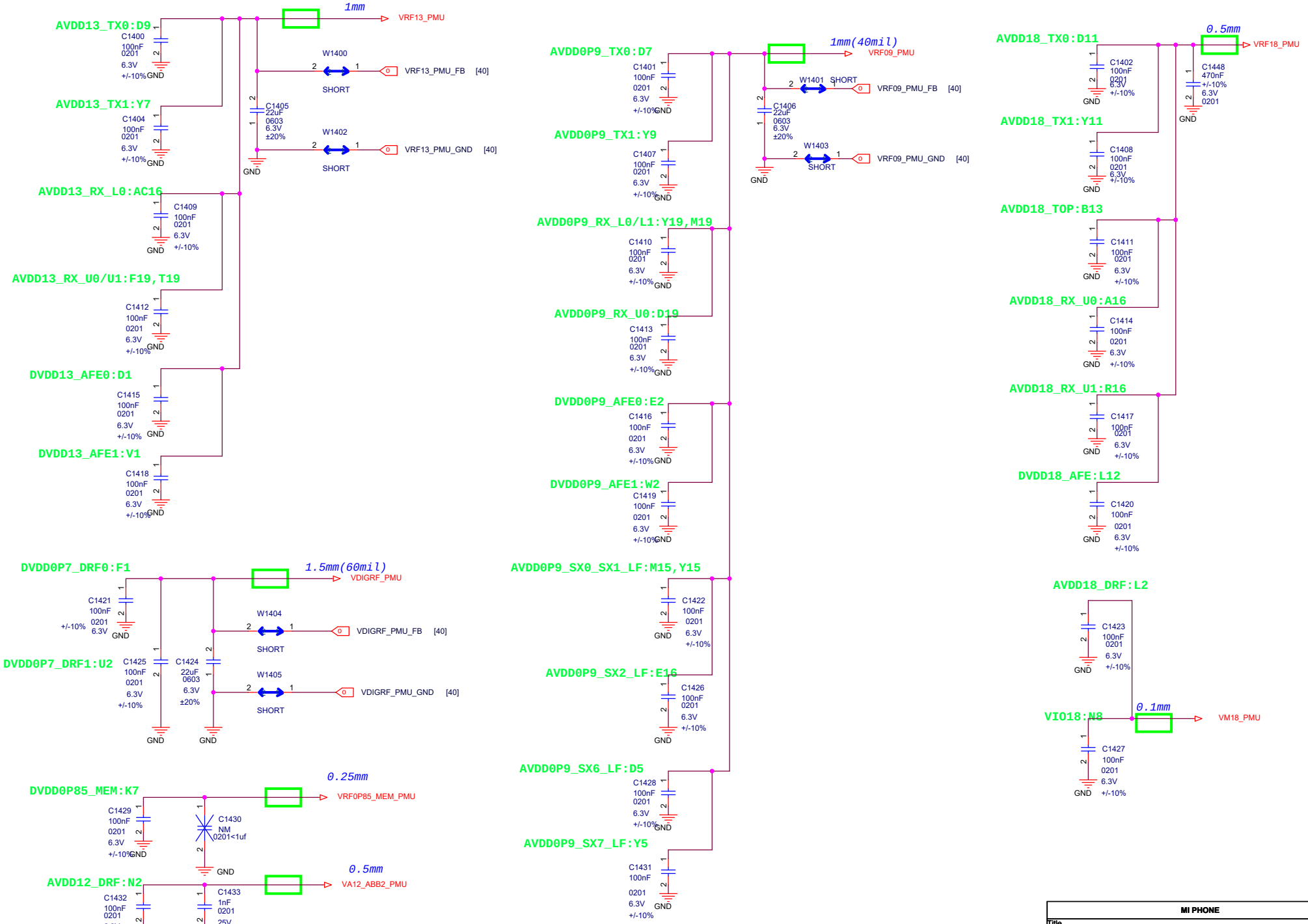

MI PHONE		
Title: MT6853		
Size: A3	Document Number: WTR PWR	Rev: P0
Date: Tuesday, August 03, 2021	Sheet of	

NR N77/N78/N79 DRx-LFEM

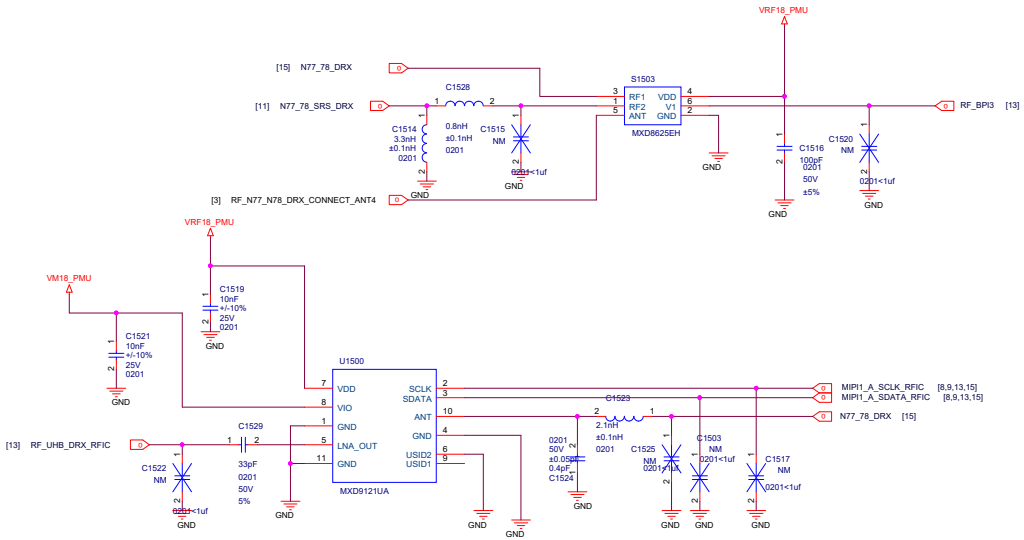

NR N77/N78/N79 DRx_MIMO-LFEM

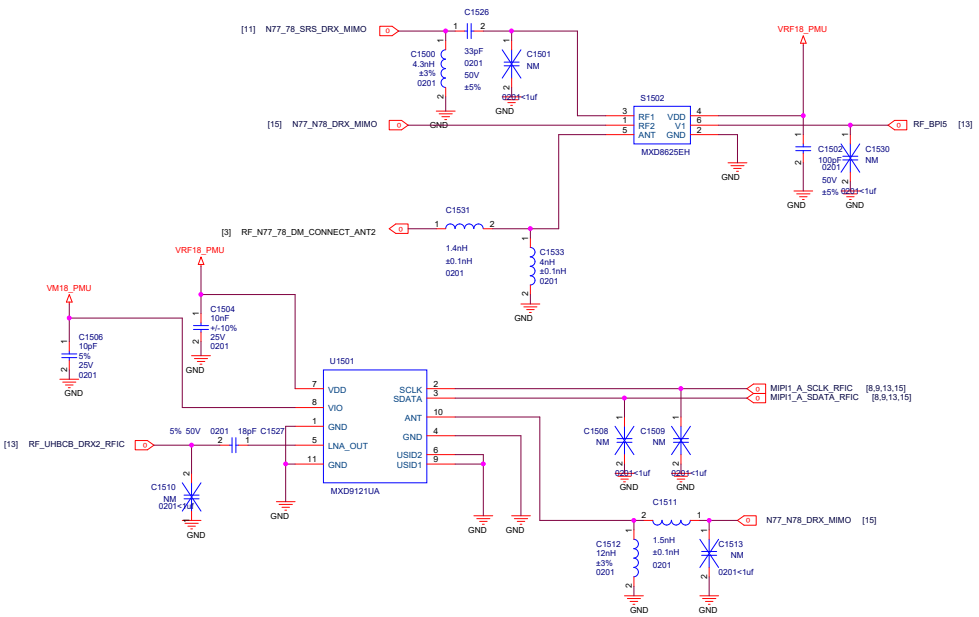

Title	MT6883_5GL		
Size A2	Document Number 5G_MIMO_LNA		Rev P0
Date: Tuesday, August 03, 2021	Sheet	of	

PH5N_N77_PA_电源

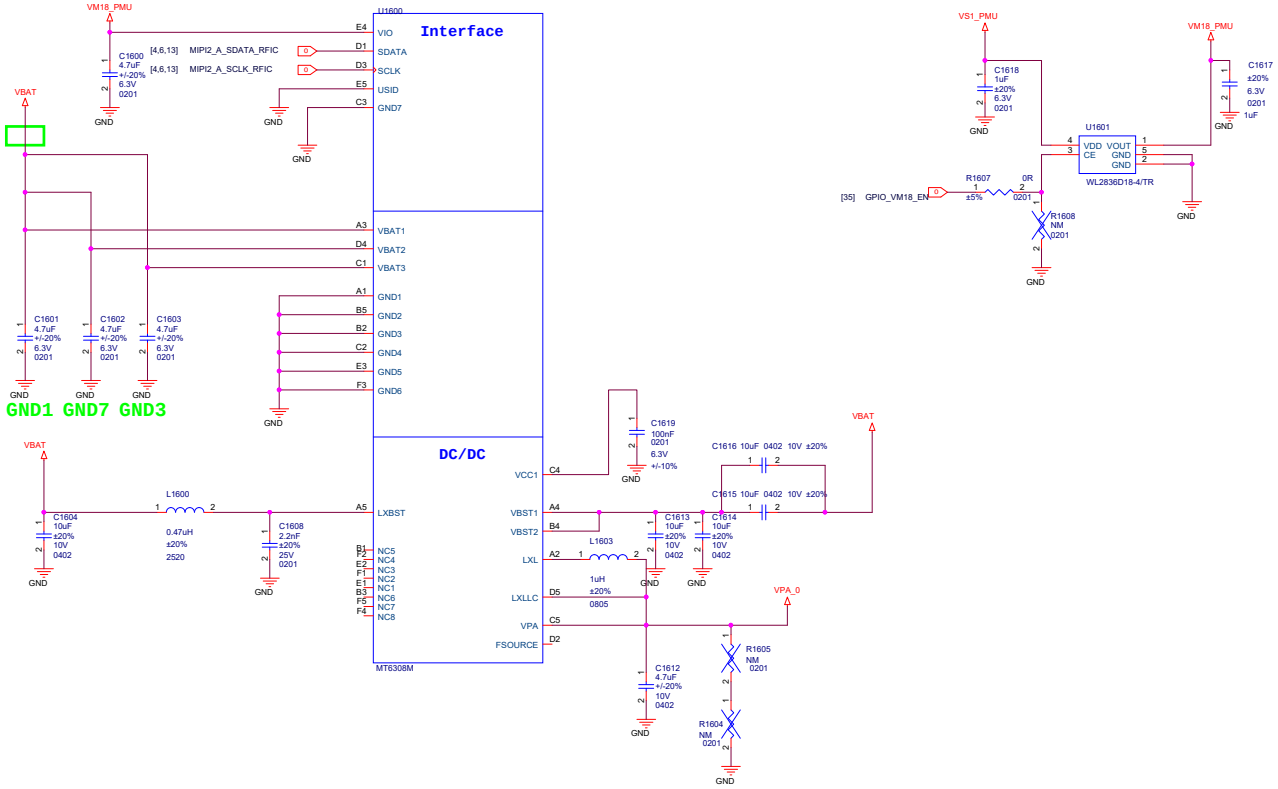

Title	MT6883_5GL		
Size A2	Document Number RF_5G_DCDC		Rev P0
Date: Tuesday, August 03, 2021	Sheet	of	

MI PHONE		
Title K16_MAIN		
Size A3	Document Number Reserved(for 5G-sub 6G)	Rev P0
Date: Tuesday, August 03, 2021	Sheet of	

Title	K16_MAIN
Size A3	Document Number Reserved(for 5G-sub 6G)
Rev	P0
Date:	Tuesday, August 03, 2021
Sheet	of

MI PHONE		
Title K16_MAIN		
Size A3	Document Number Reserved(for MM Wave)	Rev P0
Date: Tuesday, August 03, 2021	Sheet of	

MI PHONE		
Title K16_MAIN		
Size A3	Document Number Reserved(for 5G-WTR I)	Rev P0
Date: Tuesday, August 03, 2021	Sheet	of

MI PHONE		
Title K16_MAIN		
Size A3	Document Number Reserved(for 5G-WTR P)	Rev P0
Date: Tuesday, August 03, 2021	Sheet of	

MI PHONE		
Title K16_MAIN		
Size A3	Document Number Reserved(for 5G-OTHERS)	Rev P0
Date: Tuesday, August 03, 2021	Sheet of	

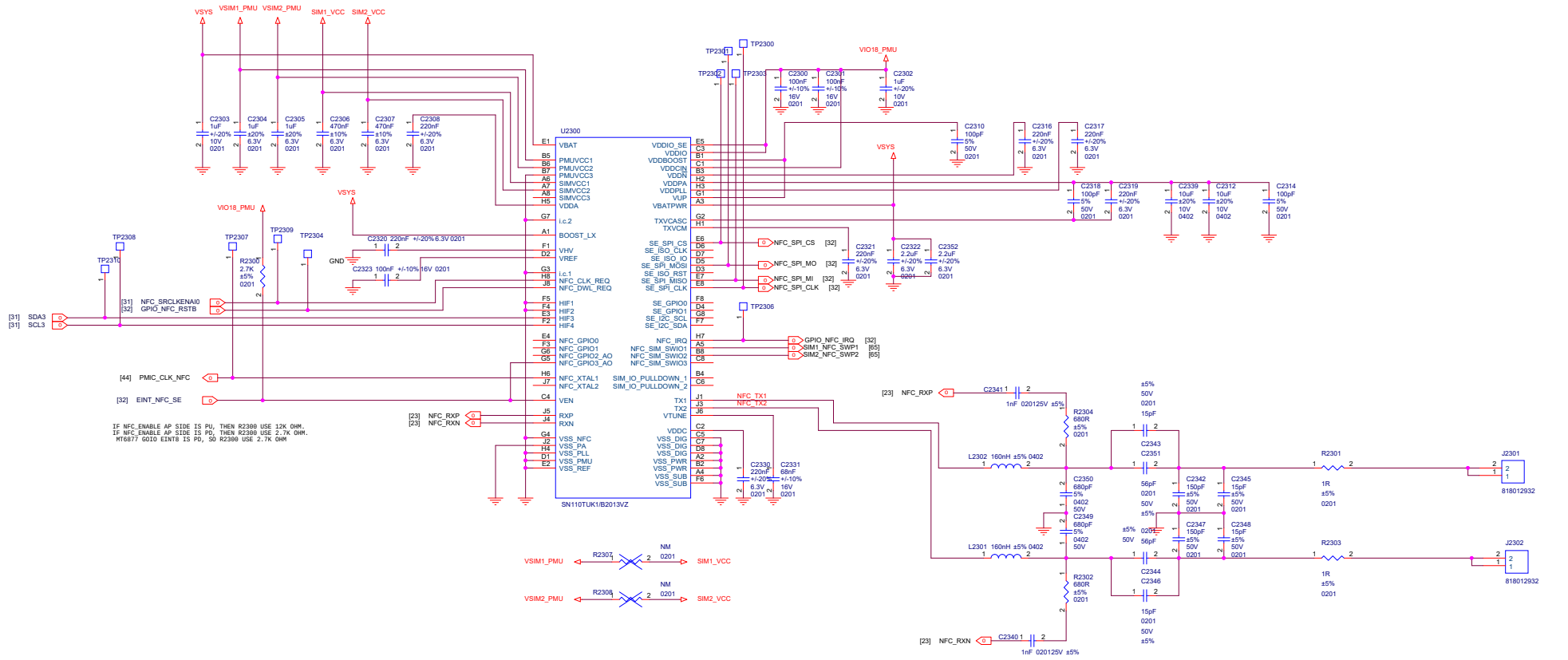

Title	K16_MAIN		
Size A2	Document Number NFC		Rev P0
Date: Tuesday, August 03, 2021		Sheet	

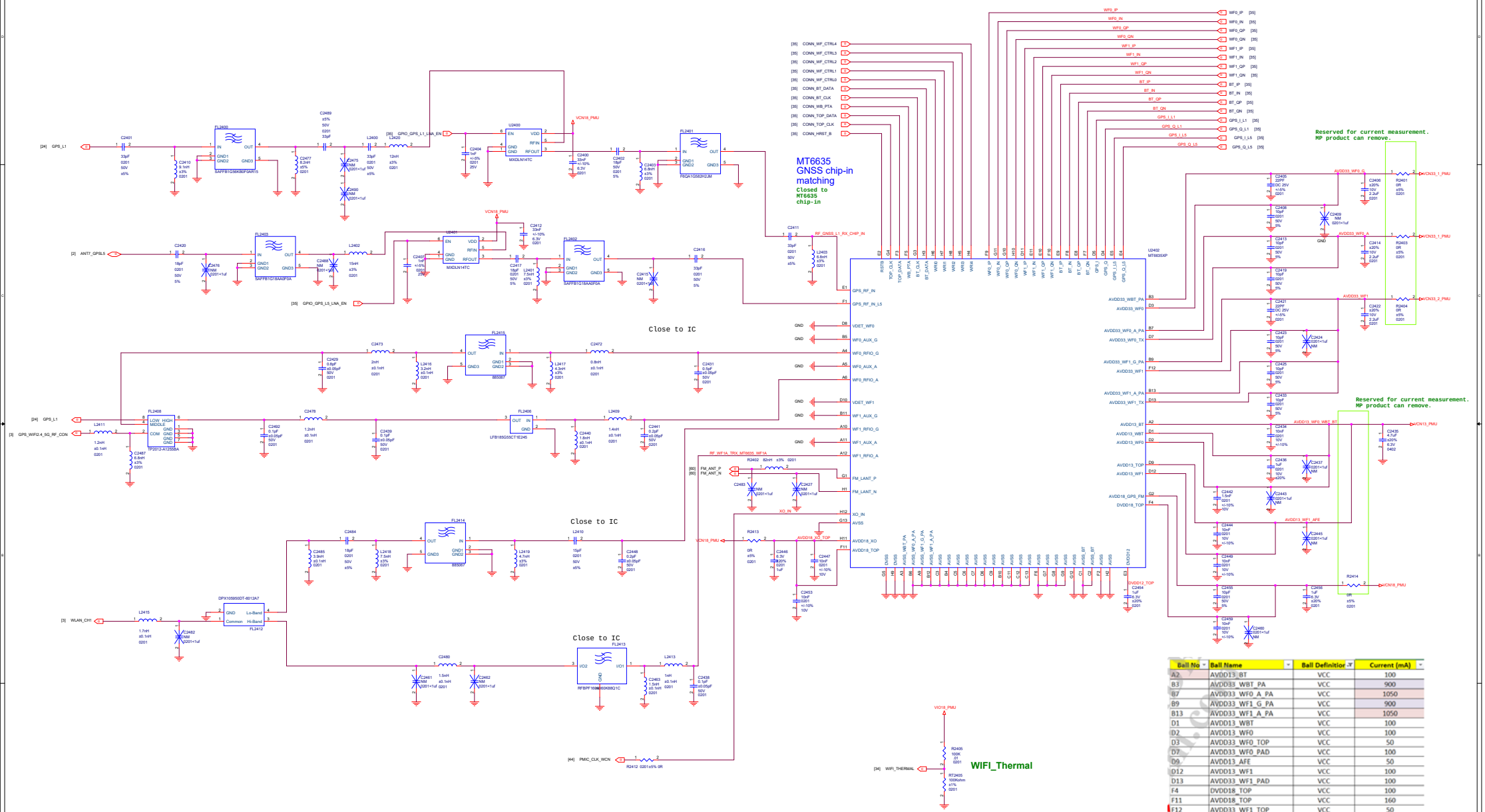

Ball No	Ball Name	Ball Definition	Current (mA)
A2	AVDD13_BT	VCC	100
B3	AVDD33_WBT_PA	VCC	900
B7	AVDD33_WF0_A_PA	VCC	1050
B9	AVDD33_WF1_G_PA	VCC	900
B13	AVDD33_WF1_A_PA	VCC	1050
D1	AVDD13_WBT	VCC	100
D2	AVDD13_WF0	VCC	100
D3	AVDD33_WF0_TOP	VCC	50
D7	AVDD33_WF0_PAD	VCC	100
D9	AVDD13_AFE	VCC	50
D12	AVDD13_WF1	VCC	100
D13	AVDD33_WF1_PAD	VCC	100
F4	DVDD18_TOP	VCC	100
F11	AVDD18_TOP	VCC	160
F12	AVDD33_WF1_TOP	VCC	50
G2	AVDD18_GPS_FM	VCC	50
H11	AVDD18_XO	VCC	10

MI PHONE		
Title: MT6873_5GA		
Size: A3	Document Number: Reserved(for WIFI FEM)	Rev: P0
Date: Tuesday, August 03, 2021	Sheet of	

MI PHONE		
Title MT6873_5GA		
Size A3	Document Number Reserved(WIFIdecoupling)	Rev P0
Date: Tuesday, August 03, 2021	Sheet of	

MI PHONE		
Title MT6873_5GA		
Size A3	Document Number Reserved(for 11ad/11ax)	Rev P0
Date: Tuesday, August 03, 2021	Sheet of	

MI PHONE		
Title MT6873_5GA		
Size A3	Document Number Reserved(for 11ad/11ax)	Rev P0
Date: Tuesday, August 03, 2021	Sheet of	

MI PHONE		
Title: MT6873_5GA		
Size: A3	Document Number: Reserved(for Digital FM)	Rev: P0
Date: Tuesday, August 03, 2021	Sheet	of

MI PHONE		
Title: MT6873_5GA		
Size: A3	Document Number: Reserved(for Analog FM)	Rev: P0
Date: Tuesday, August 03, 2021	Sheet of	

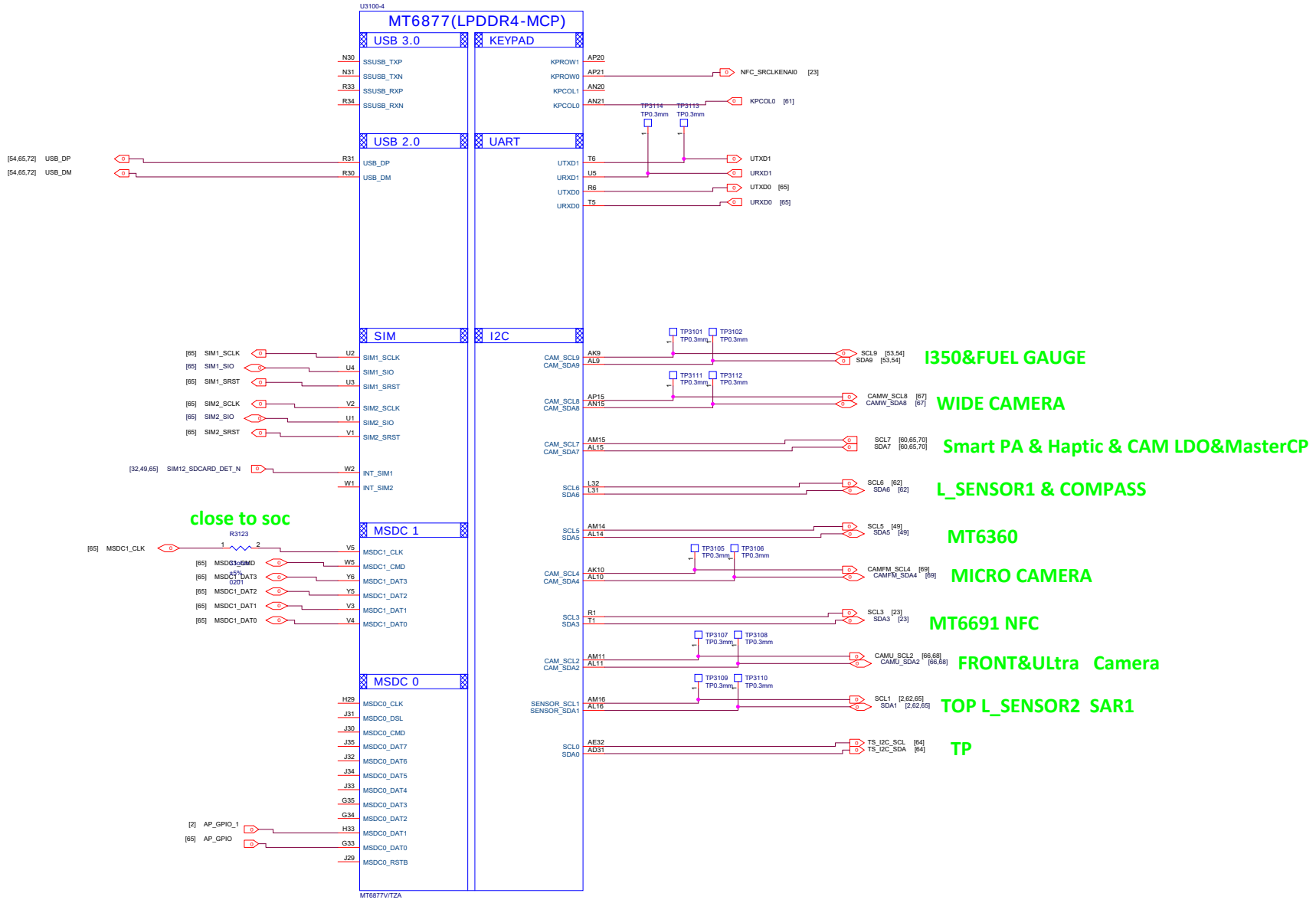

Title	MT6877 GPIO-1	
Size A2	Document Number MT6877	Rev P0
Date: Tuesday, August 03, 2021	Sheet	

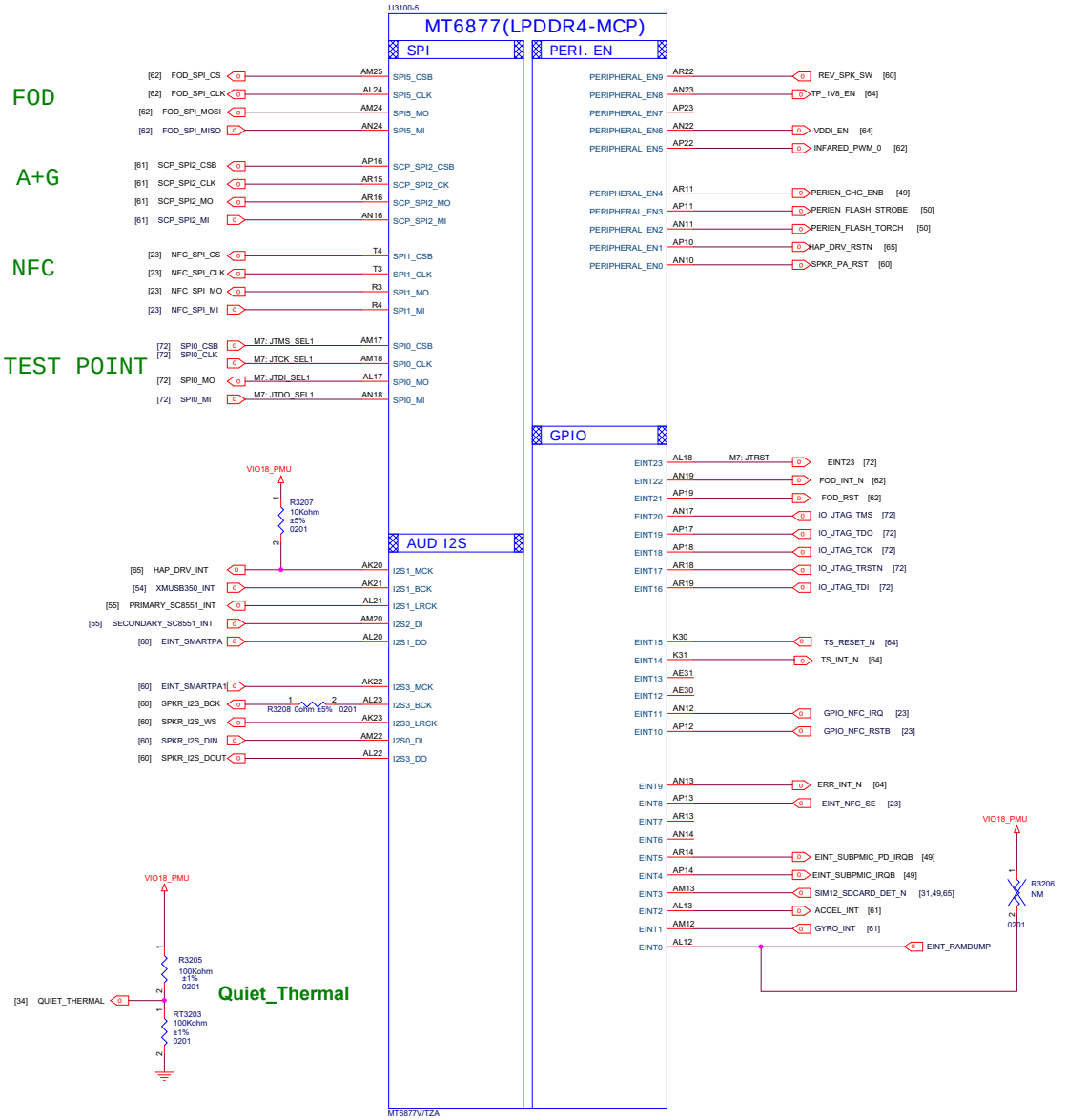

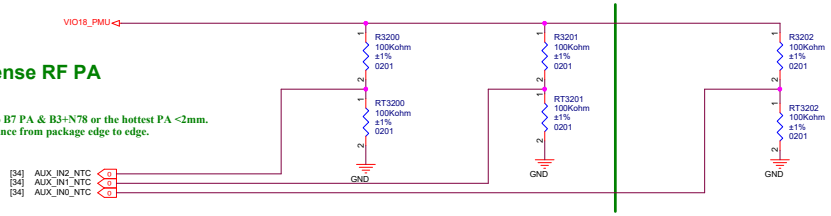

Thermistor to sense RF PA temperature

1. RT3200 & RT3201 must close to B7 PA & B3+N78 or the hottest PA <2mm.
2. The distance is the shortest distance from package edge to edge.

Thermistor to sense AP temperature

1. RT3202 must keep a distance about 6~8 mm away from AP and far from other heat sources 10 mm at least.
2. The distance is the shortest distance from package edge to edge.

Title	MT6877 GPIO-2	
Size A2	Document Number MT6877	Rev P0
Date: Tuesday, August 03, 2021	Sheet	

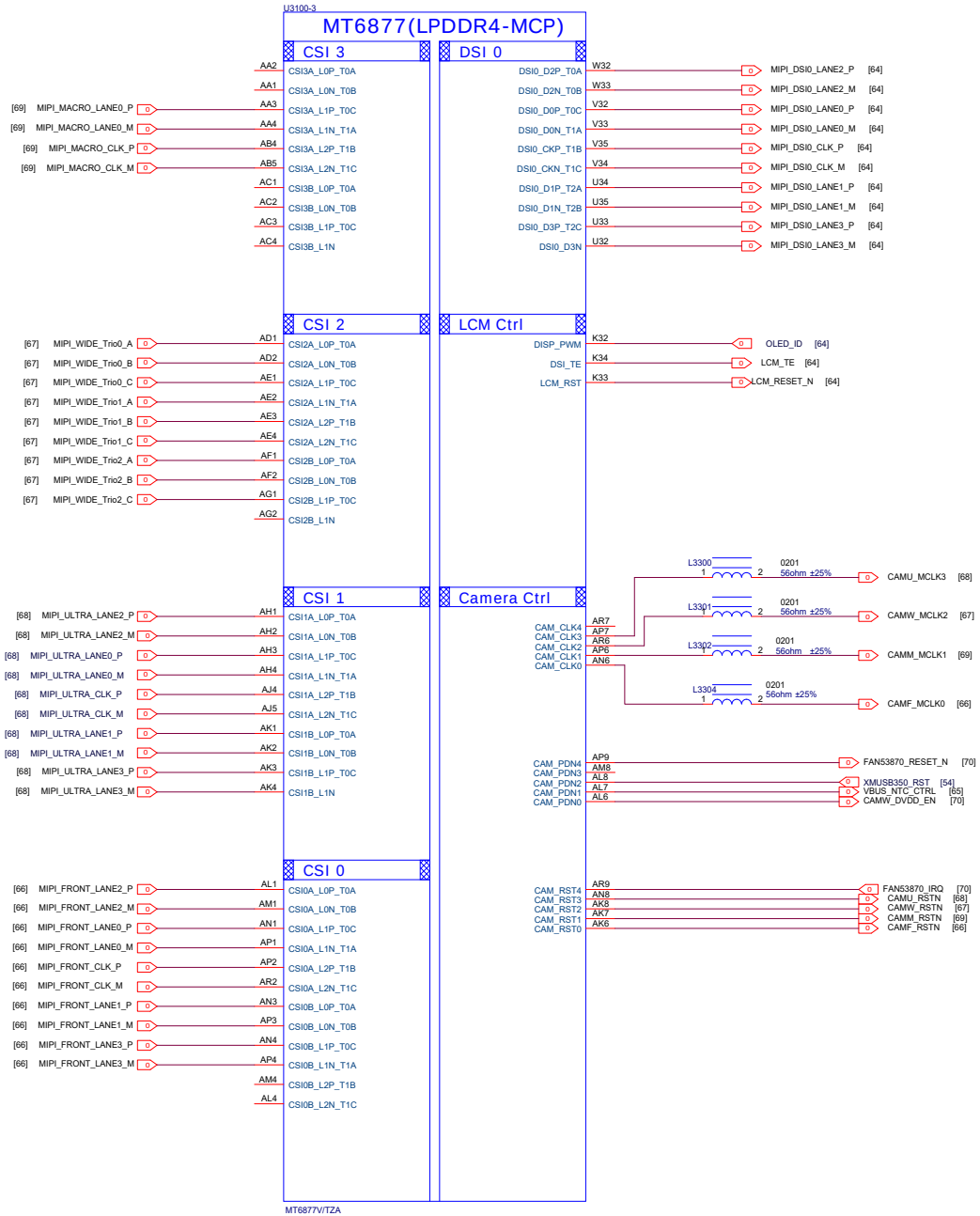

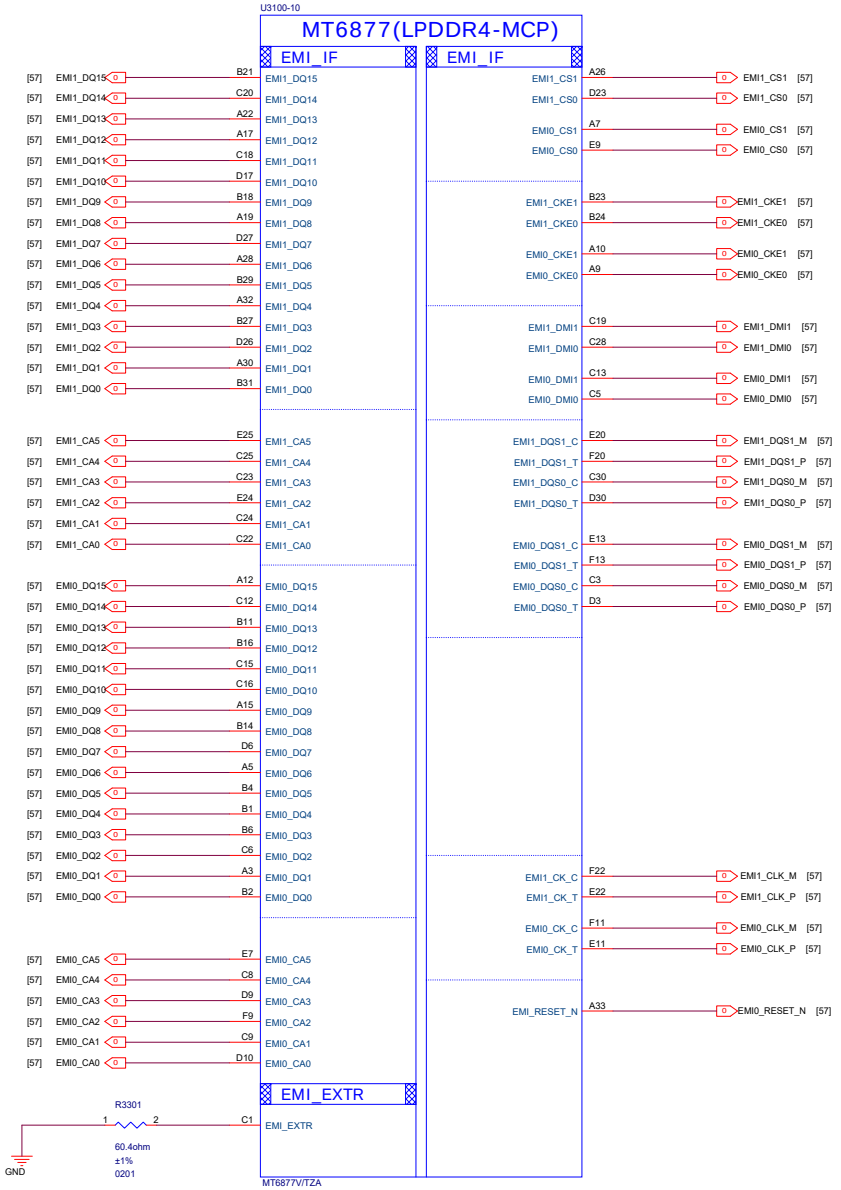

Title	MT6877 CAM LCM EMI		
Size C	Document Number MT6877		Rev P0
Date:	Tuesday, August 03, 2021	Sheet	

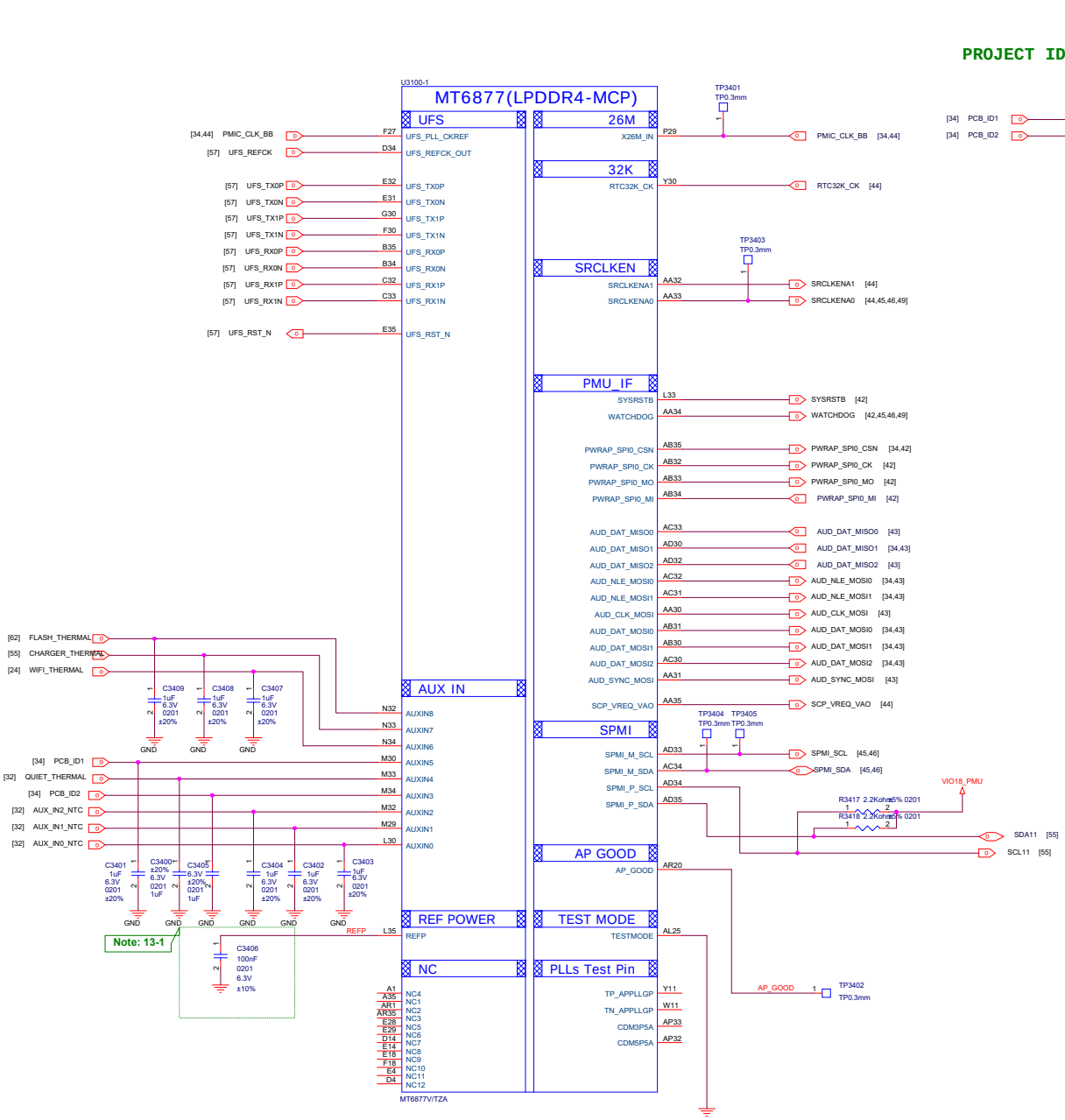

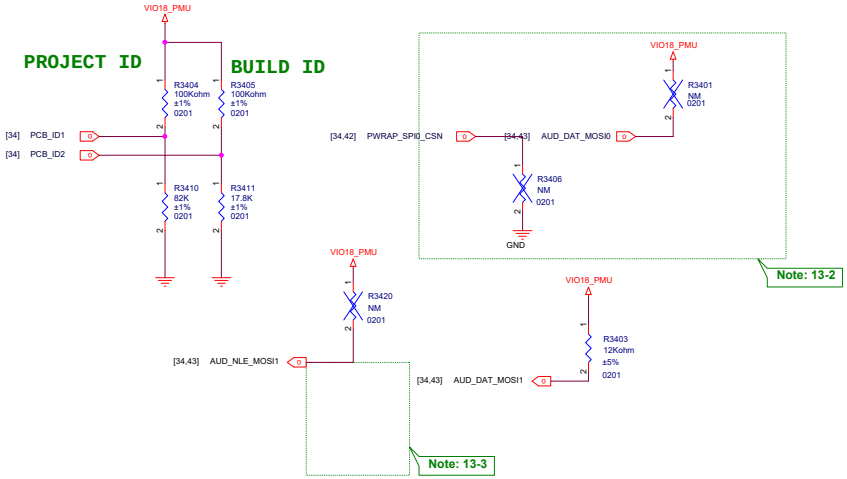

Schematic design notice:

Note 13-1: The load cap. have to be placed as close to REFP ball as possible.

Note 13-2: "PWRAP_SPI0_CSN" and "AUD_DAT_MOS0"I pin features in trapping pin to enable JTAG.

PWRAP_SPI0_CSN	AUD_DAT_MOSI0	AP JTAG	IO JTAG
H (Default)	L (Default)	N/A	N/A
H	H (by external PU)	SPI0_CSB, SPI0_CLK, SPI0_MO, SPI0_MI, DMIC_CLK	N/A
L (by external PD)	L	SPI0_CSB, SPI0_CLK, SPI0_MO, SPI0_MI, DMIC_CLK	TDM_LRCK/TDM_BCK/TDM_MCK/ TDM_DATA0/TDM_DATA1
L (by external PD)	H (by external PU)	MSDC1_CLK, MSDC1_CMD, MSDC1_DAT0, MSDC1_DAT1, MSDC1_DAT2	N/A

Note 13-3: "AUD_NLE_MOSI1" features in trapping pin to enable JTAG over USB 2.0 port.

AUD_NLE_MOSI1	USB JTAG
L (Default)	USB 2.0
H (by external PU)	DP/DM output JTAG

Note 13-4: "AUD_NLE_MOSI0" is trapping pin to select UFS booting only or eMMC booting only.

AUD_NLE_MOSI0	Storage Booting
L (Default)	UFS only
H (by external PU)	eMMC only

Title	MT6877 INTF	
Size A2	Document Number MT6877	Rev P0
Date: Tuesday, August 03, 2021	Sheet	

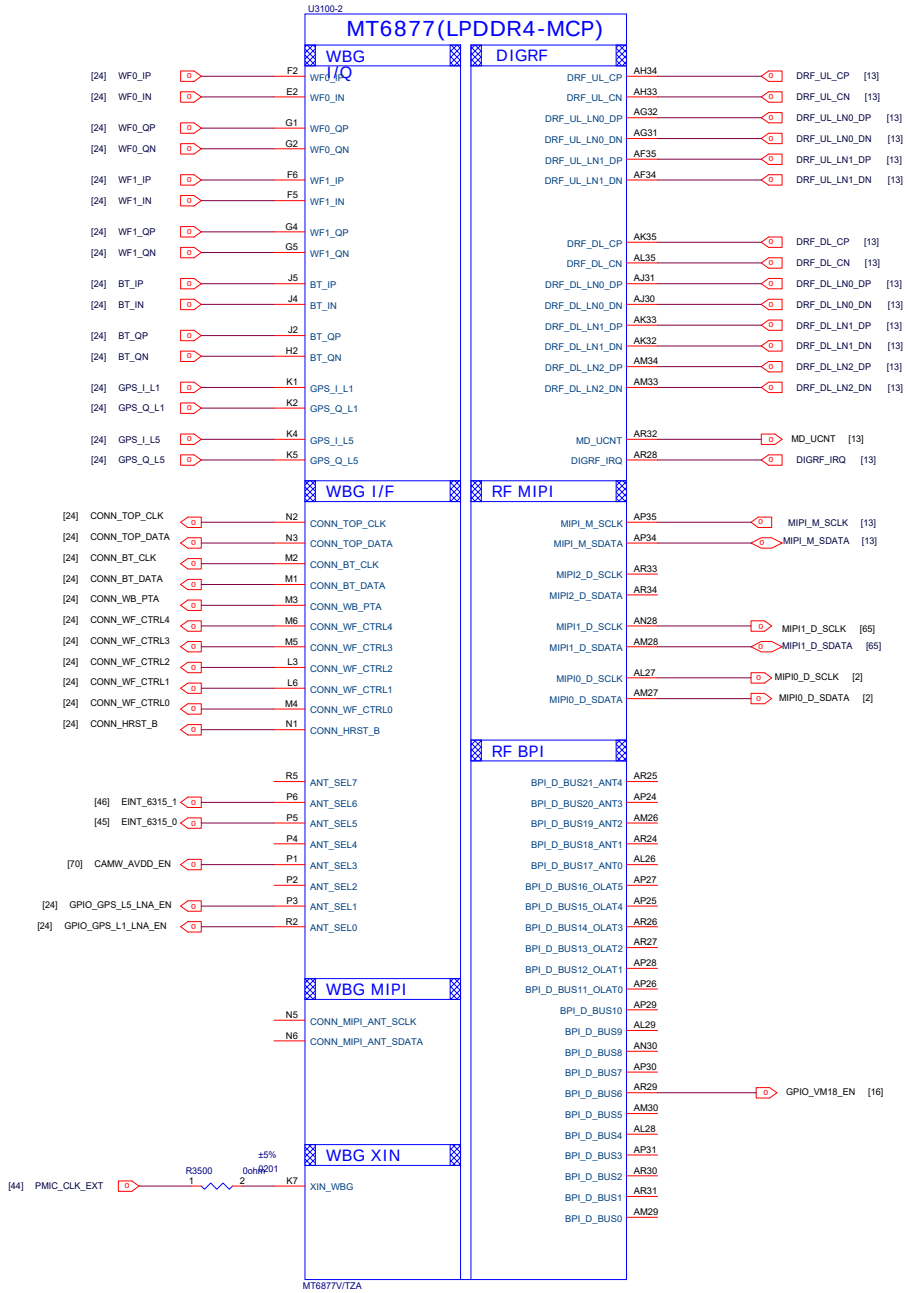

Title	MT6877 RF INTF	
Size C	Document Number MT6877	Rev P0
Date: Tuesday, August 03, 2021	Sheet	

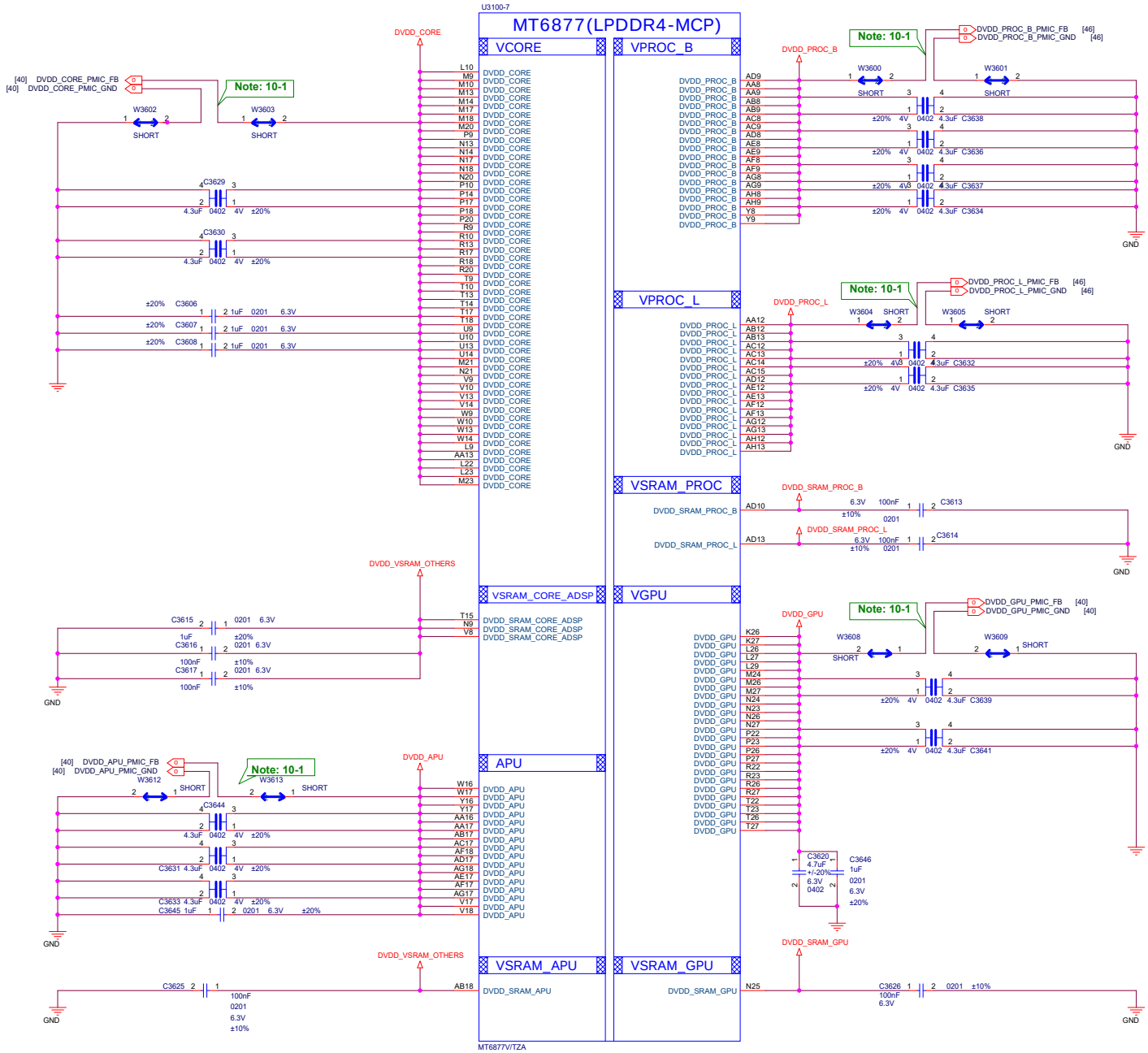

Schematic design notice of "10_BB_POWER_PDN" page.

Note 10-1: Differential pair of PMIC remote sense must be close to BB's ball.

Remote sense trace with GND shielding to PMIC (Differential)

Title	MT6873_5GA	
Size C	Document Number K16_MAIN	Rev
Date: Tuesday, August 03, 2021	Sheet	

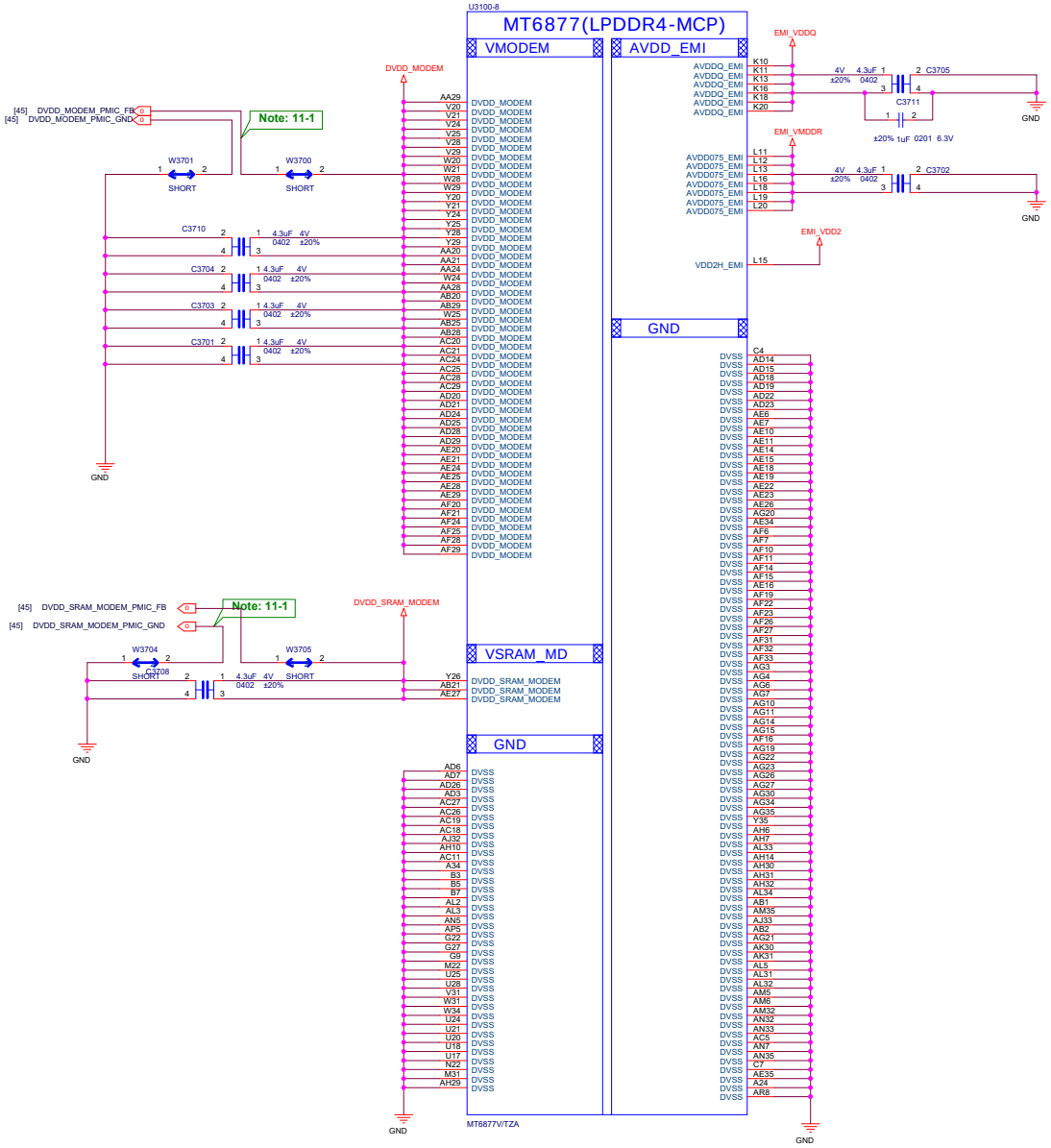

Schematic design notice of "11_BB_POWER_PDN" page.

Note 11-1: Differential pair of PMIC remote sense must be close to BB's ball.

Remote sense trace with GND shielding to PMIC (Differential)

Title	MT6873_5GA
Size	A2
Document Number	K16_MAIN
Rev	
Date:	Tuesday, August 03, 2021
Sheet	

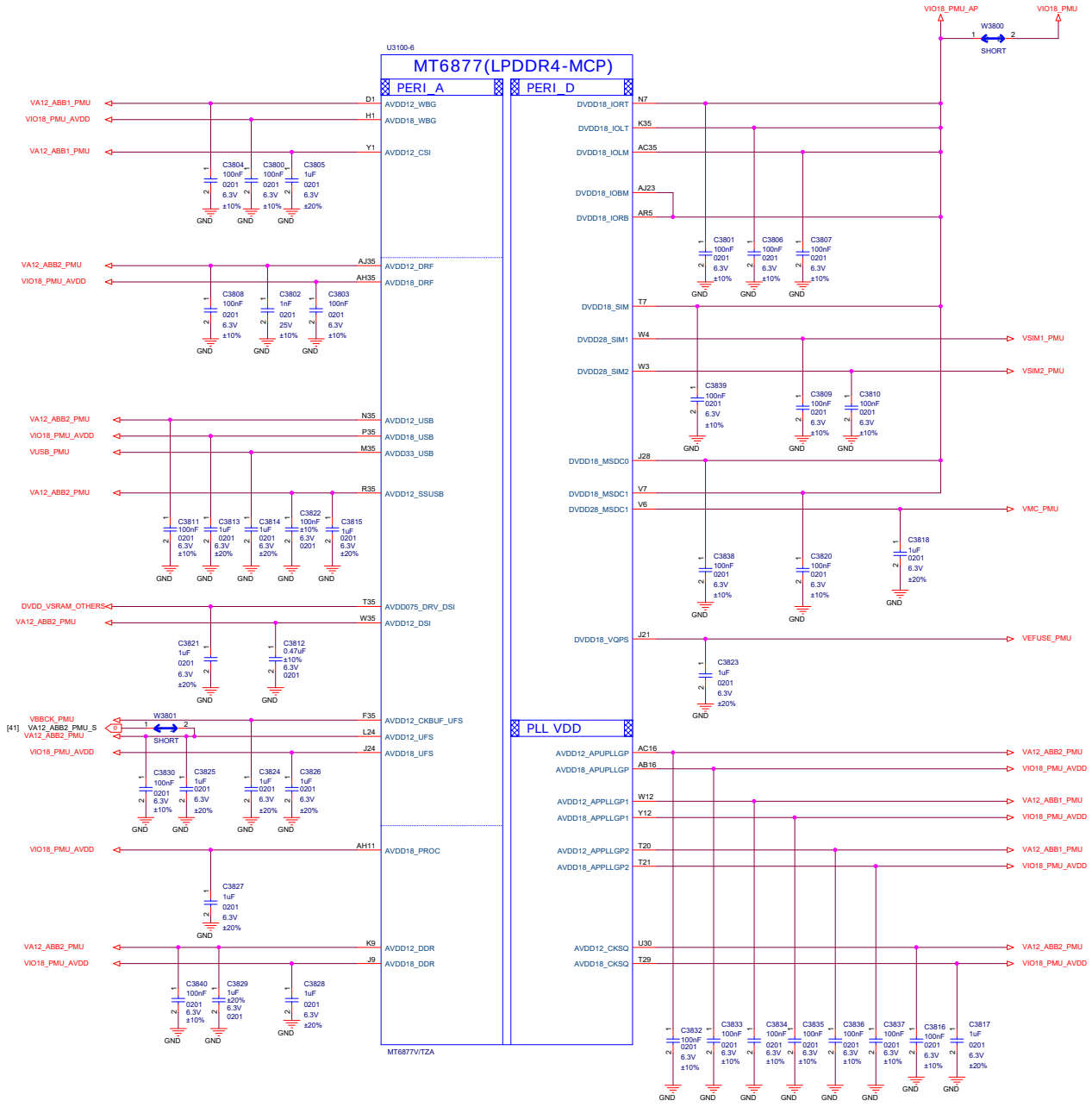

Title	MT6877 PWR3		
Size A2	Document Number MT6877		Rev P0
Date: Tuesday, August 03, 2021	Sheet 38	80	

U3100-9

MT6877(LPDDR4-MCP)

GND GND

AC10	DVSS	DVSS	M25
B9	DVSS	DVSS	M28
B10	DVSS	DVSS	N4
B12	DVSS	DVSS	N8
B15	DVSS	DVSS	D7
B17	DVSS	DVSS	D24
B19	DVSS	DVSS	N15
B22	DVSS	DVSS	N16
B26	DVSS	DVSS	N19
B28	DVSS	DVSS	N28
B30	DVSS	DVSS	N29
B32	DVSS	DVSS	AJ1
B33	DVSS	DVSS	P7
C2	DVSS	DVSS	P8
C11	DVSS	DVSS	P11
C14	DVSS	DVSS	P12
C17	DVSS	DVSS	P15
C21	DVSS	DVSS	P16
C26	DVSS	DVSS	P19
C27	DVSS	DVSS	P21
C29	DVSS	DVSS	P24
C31	DVSS	DVSS	P25
C34	DVSS	DVSS	P30
C35	DVSS	DVSS	P31
D2	DVSS	DVSS	P33
D5	DVSS	DVSS	P34
D8	DVSS	DVSS	R7
D12	DVSS	DVSS	R8
D13	DVSS	DVSS	R11
D15	DVSS	DVSS	R15
D16	DVSS	DVSS	R19
D18	DVSS	DVSS	R24
D19	DVSS	DVSS	R25
D20	DVSS	DVSS	R28
D21	DVSS	DVSS	R29
D22	DVSS	DVSS	R32
D25	DVSS	DVSS	D29
D28	DVSS	DVSS	T8
D31	DVSS	DVSS	T11
D32	DVSS	DVSS	T12
D33	DVSS	DVSS	E12
E3	DVSS	DVSS	T16
E5	DVSS	DVSS	T19
E6	DVSS	DVSS	T24
E8	DVSS	DVSS	T25
E10	DVSS	DVSS	T30
E15	DVSS	DVSS	T31
E17	DVSS	DVSS	T33
E21	DVSS	DVSS	T34
E23	DVSS	DVSS	U6
E26	DVSS	DVSS	U8
E30	DVSS	DVSS	U11
E33	DVSS	DVSS	U12
E34	DVSS	DVSS	U15
AG24	DVSS	DVSS	U16
F4	DVSS	DVSS	U19
F7	DVSS	DVSS	U7
F8	DVSS	DVSS	U23
F10	DVSS	DVSS	U26
F12	DVSS	DVSS	AC7
F15	DVSS	DVSS	U31
F16	DVSS	DVSS	V11
F19	DVSS	DVSS	V12
F21	DVSS	DVSS	V15
F23	DVSS	DVSS	V16
F25	DVSS	DVSS	V19
F28	DVSS	DVSS	V22
F29	DVSS	DVSS	V23
F31	DVSS	DVSS	V26
F32	DVSS	DVSS	V27
F33	DVSS	DVSS	W7
F34	DVSS	DVSS	W15
G3	DVSS	DVSS	W18
G28	DVSS	DVSS	W19
G31	DVSS	DVSS	W22
H3	DVSS	DVSS	W23
H5	DVSS	DVSS	W26
H20	DVSS	DVSS	W27
H21	DVSS	DVSS	W30
H22	DVSS	DVSS	AJ2
H30	DVSS	DVSS	Y2
H31	DVSS	DVSS	Y3
J11	DVSS	DVSS	Y4
J12	DVSS	DVSS	Y7
J13	DVSS	DVSS	Y10
J14	DVSS	DVSS	Y14
J16	DVSS	DVSS	Y15
J19	DVSS	DVSS	Y18
J20	DVSS	DVSS	Y19
AG16	DVSS	DVSS	Y22
K29	DVSS	DVSS	Y23
K3	DVSS	DVSS	Y31
K6	DVSS	DVSS	AJ7
K12	DVSS	DVSS	AA5
AC6	DVSS	DVSS	AA6
K14	DVSS	DVSS	AA7
C10	DVSS	DVSS	AA10
K17	DVSS	DVSS	AA11
K19	DVSS	DVSS	AA14
K21	DVSS	DVSS	AA15
AN34	DVSS	DVSS	AA18
K24	DVSS	DVSS	AA19
K25	DVSS	DVSS	AA22
K28	DVSS	DVSS	AA23
L1	DVSS	DVSS	AA26
L2	DVSS	DVSS	AA27
L5	DVSS	DVSS	AJ8
L7	DVSS	DVSS	AB6
L8	DVSS	DVSS	H6
L21	DVSS	DVSS	AB10
L25	DVSS	DVSS	AB11
L28	DVSS	DVSS	AB14
AF3	DVSS	DVSS	AB15
M7	DVSS	DVSS	AB19
M8	DVSS	DVSS	AB22
M11	DVSS	DVSS	AB23
M12	DVSS	DVSS	AB26
M15	DVSS	DVSS	AB27
M16	DVSS	DVSS	AK5
M19	DVSS	DVSS	W8
AG25	DVSS	DVSS	Y27
AG28	DVSS	DVSS	AD27
E19	DVSS	DVSS	AM2
E27	DVSS	DVSS	AN2
F14	DVSS	DVSS	AR3
F24	DVSS	DVSS	AR4
R12	DVSS	DVSS	J8
R16	DVSS	DVSS	K8
R21	DVSS	DVSS	AD11
U7	DVSS	DVSS	E1
H8	DVSS	DVSS	G11
J6	DVSS	DVSS	G13
AG29	DVSS	DVSS	G18
AJ29	DVSS	DVSS	G20
AK34	DVSS	DVSS	AK29
	DVSS		

MT6877V/TZA

GND GND

Title	MT6877 GND	
Size C	Document Number MT6877	Rev P0
Date: Tuesday, August 03, 2021	Sheet	

ALL C out Close to SOC

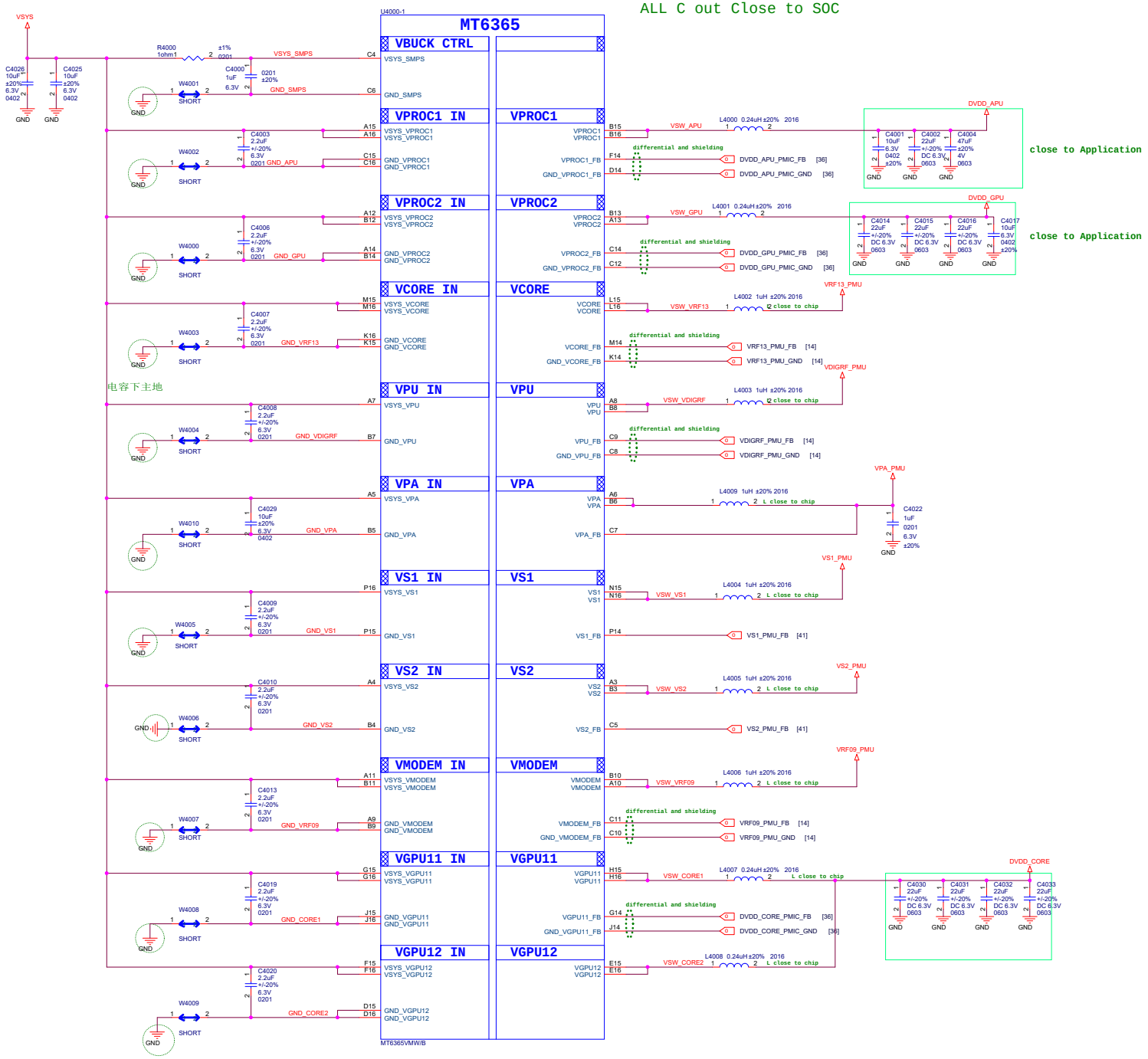

Title	MT6365 BUCK	
Size A2	Document Number MT6877	Rev P0
Date: Tuesday, August 03, 2021	Sheet	

1. "Typical Cap" defined in design notice is the minimum cap. to LDO Cout.
2. NC cap can move to application, if (PCB L<20nH, PCB R<0.2mohm)
=> value and placement of Cap, please refer design notice

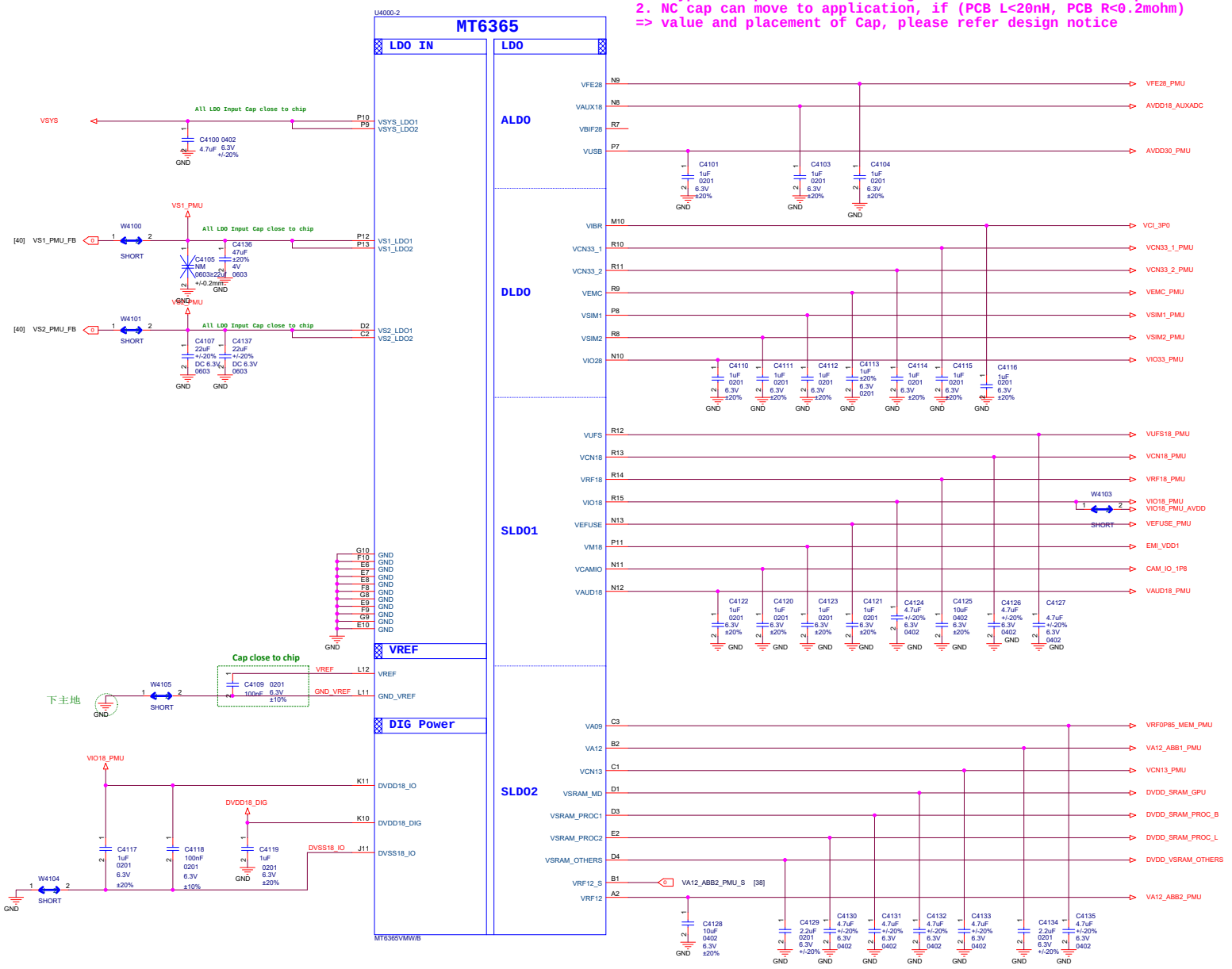

Title	MT6365 LDO	
Size A2	Document Number MT6877	Rev P0
Date: Tuesday, August 03, 2021	Sheet	

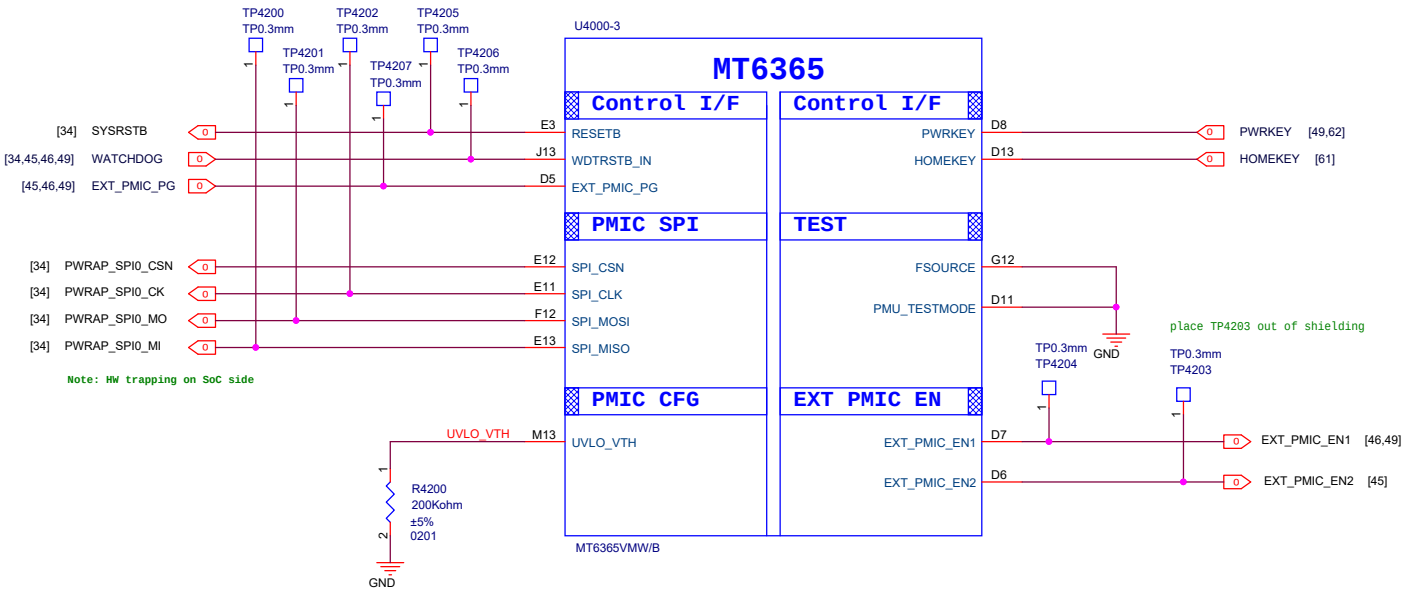

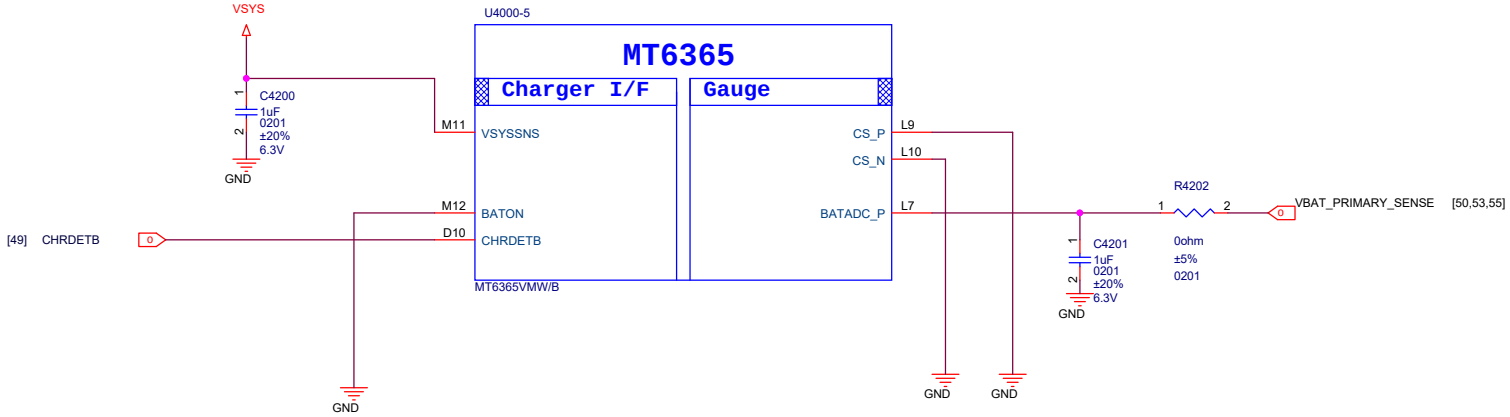

Title	MT6365 General	
Size A3	Document Number MT6877	Rev P0
Date: Tuesday, August 03, 2021	Sheet	

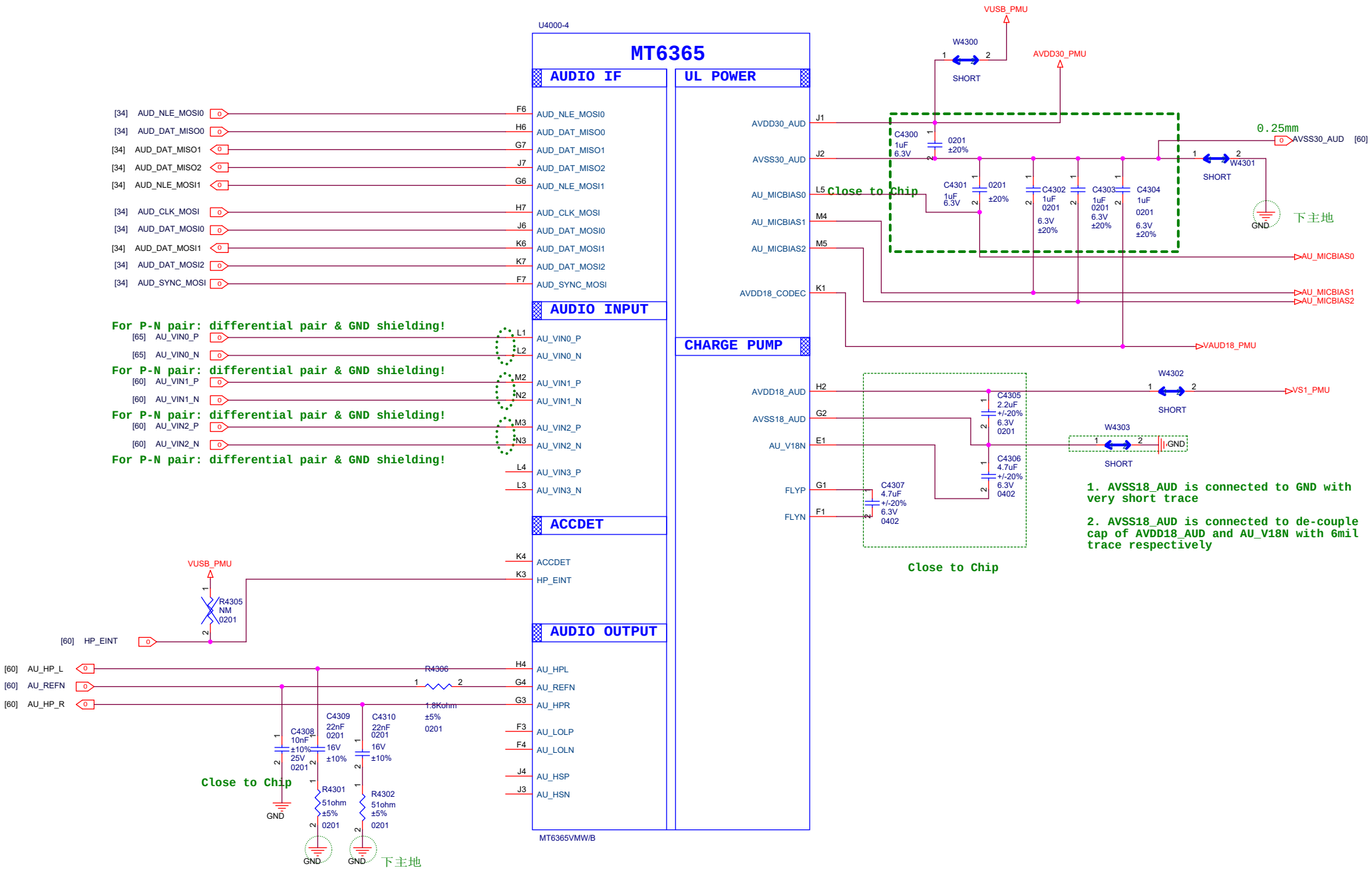

-AU_HPL and AU_HPR should be routed as single end signal and be guarded by GND, up and down, left and right respectively

-The suggested layout pattern of AU_HPL/ AU_HPR/ AU_REFN is " GND AU_HPL AU_REFN AU_HPR GND"

Title	MT6365 AUDIO	
Size A3	Document Number MT6877	Rev P0
Date: Tuesday, August 03, 2021	Sheet	

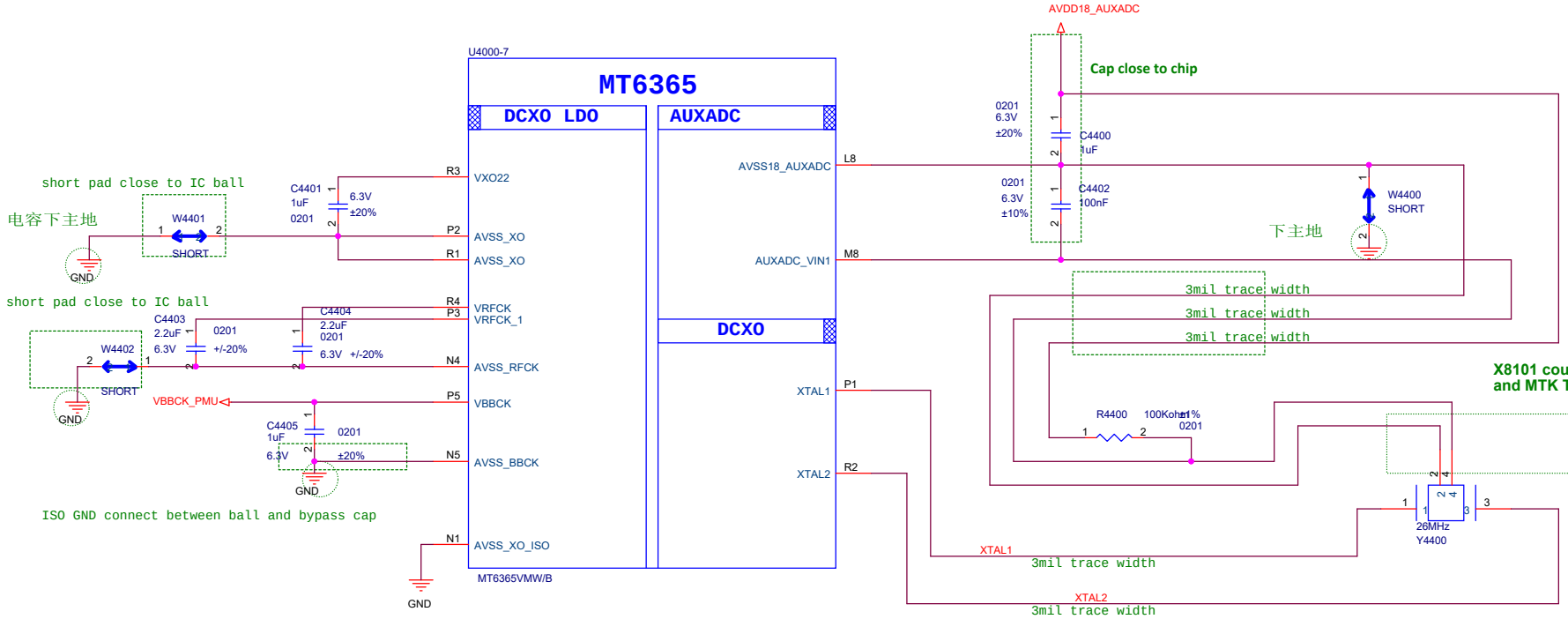

DCXO

X8101 could use MTK TMS Part II QVL(CL 7pF, 2520 Size) and MTK TMS Part III QVL(CL 8pF, 2016 Size)

Route XTAL1/ XTAL2/ AVDD18_AUXADC/ AUXADC_VIN/ AVSS18_AUXADC with 3mils width traces and well GND shielding.

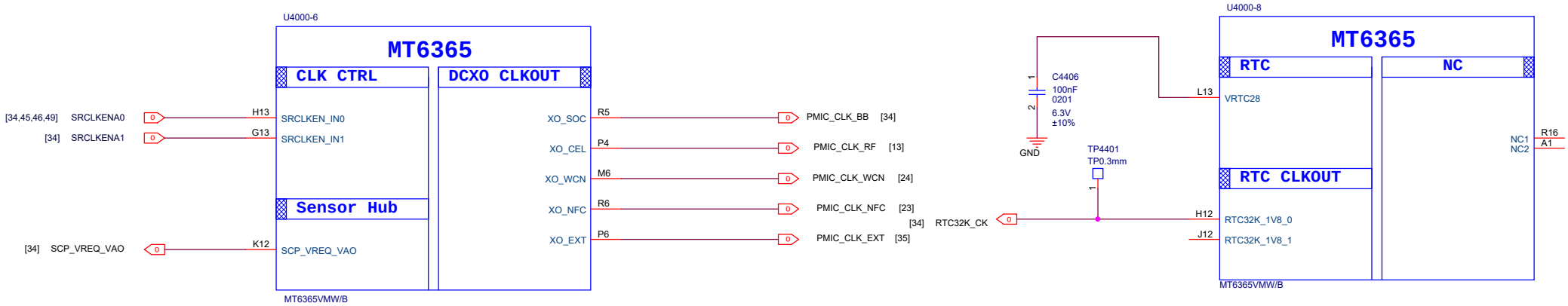

Title	MT6365 CLOCK	
Size A3	Document Number MT6877	Rev P0
Date: Tuesday, August 03, 2021	Sheet	

MT6315 4-Phase Buck (GPU)

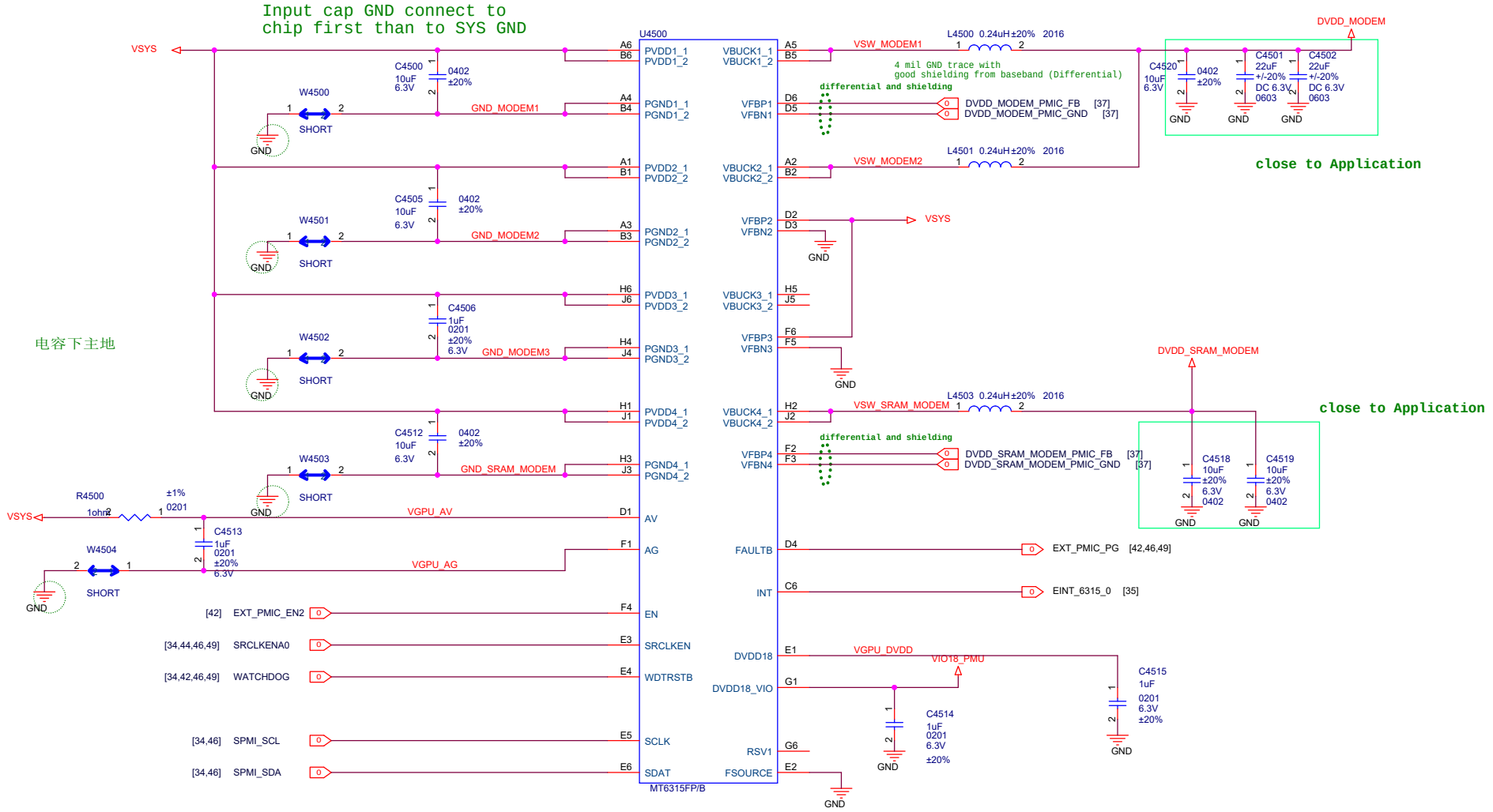

Title	MT6315 VMD	
Size A3	Document Number MT6877	Rev P0
Date: Tuesday, August 03, 2021	Sheet	

MT6315 4-Phase Buck (CPU)

Input cap GND connect to
chip first than to SYS GND

ALL C out Close to SOC

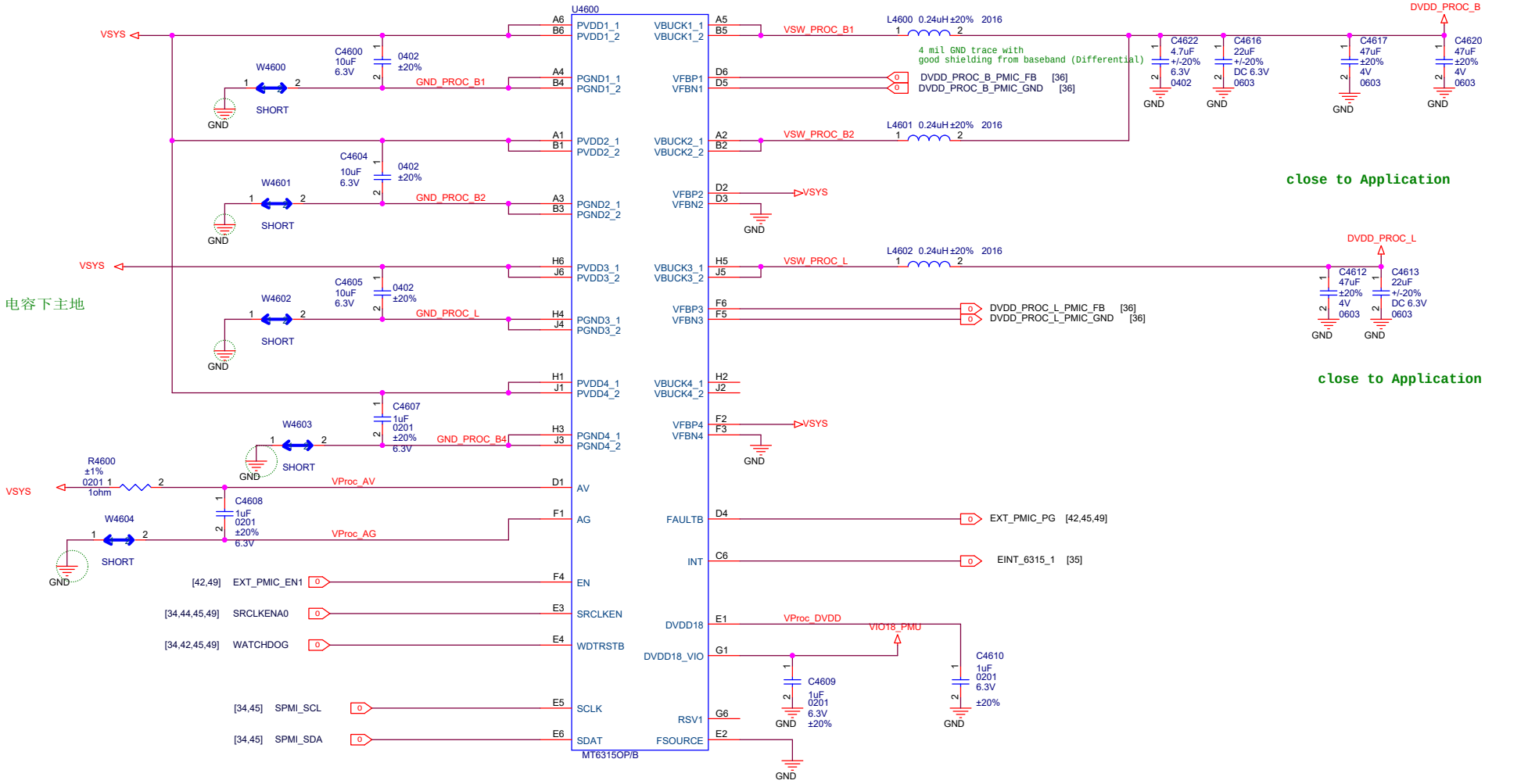

Title	MT6315 Vproc	
Size A3	Document Number MT6877	Rev P0
Date: Tuesday, August 03, 2021	Sheet	

Title	MT6315 Reserved	
Size A3	Document Number MT6877	Rev P0
Date: Tuesday, August 03, 2021	Sheet	

ALL C out Close to DDR

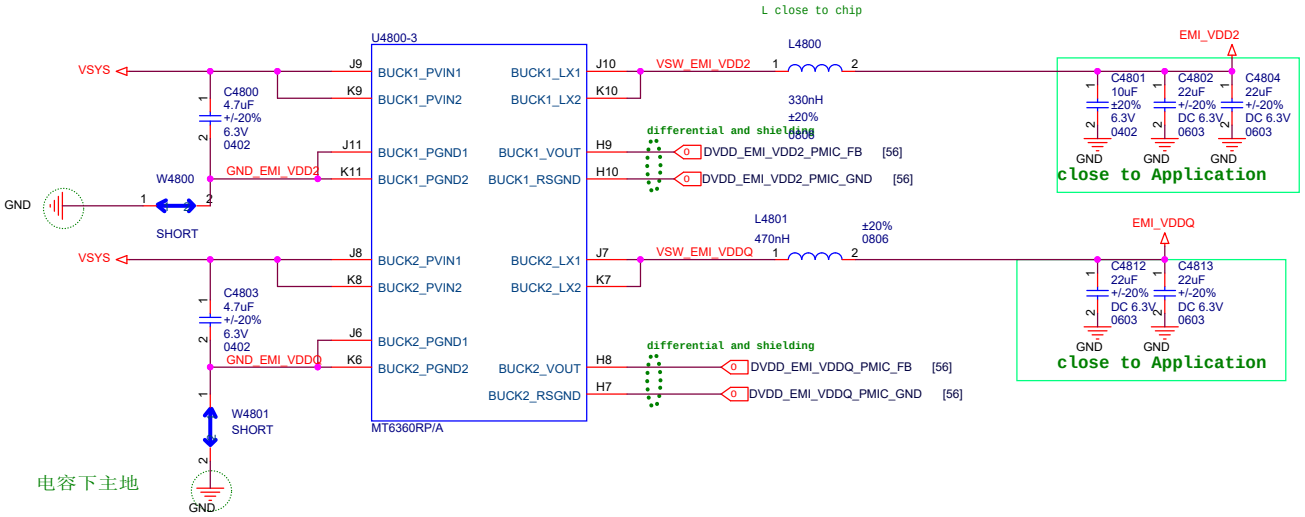

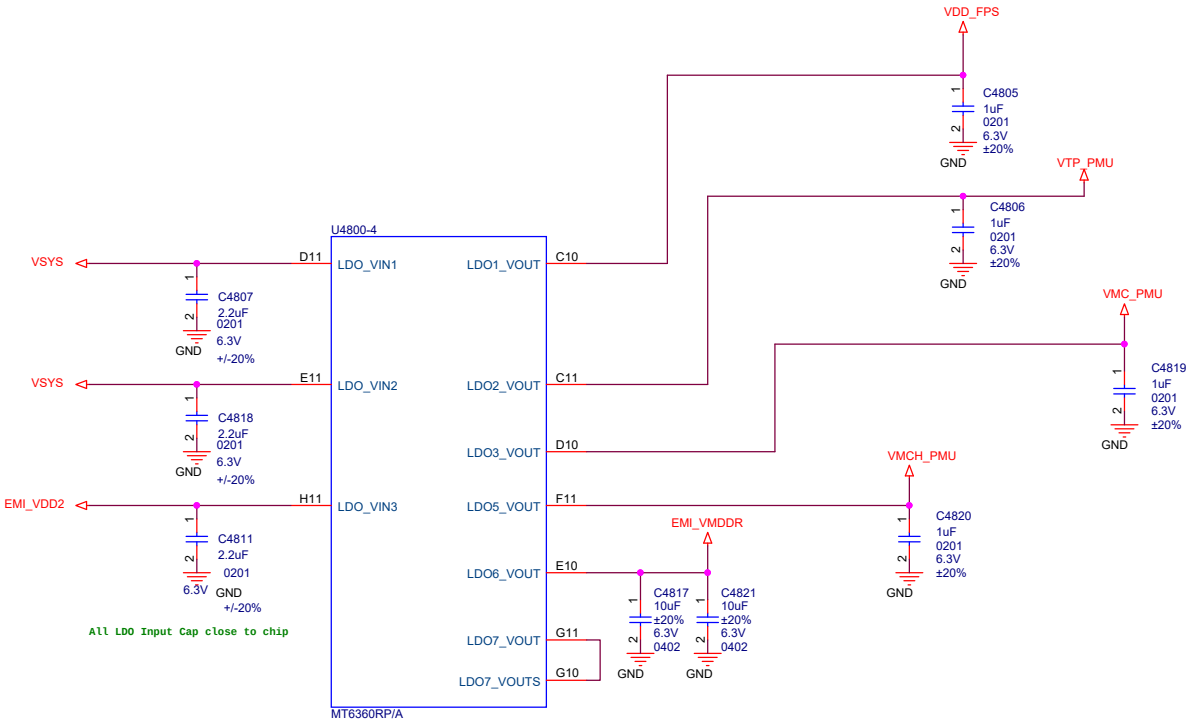

LDO1	VFP
LDO2	VTP
LDO3	VMC
LDO5	SD_CARD_2P95
LDO6	
LDO7	VMDDR_EN

Title	MT6360 BUCK LDO	
Size A3	Document Number MT6877	Rev P0
Date: Tuesday, August 03, 2021	Sheet	

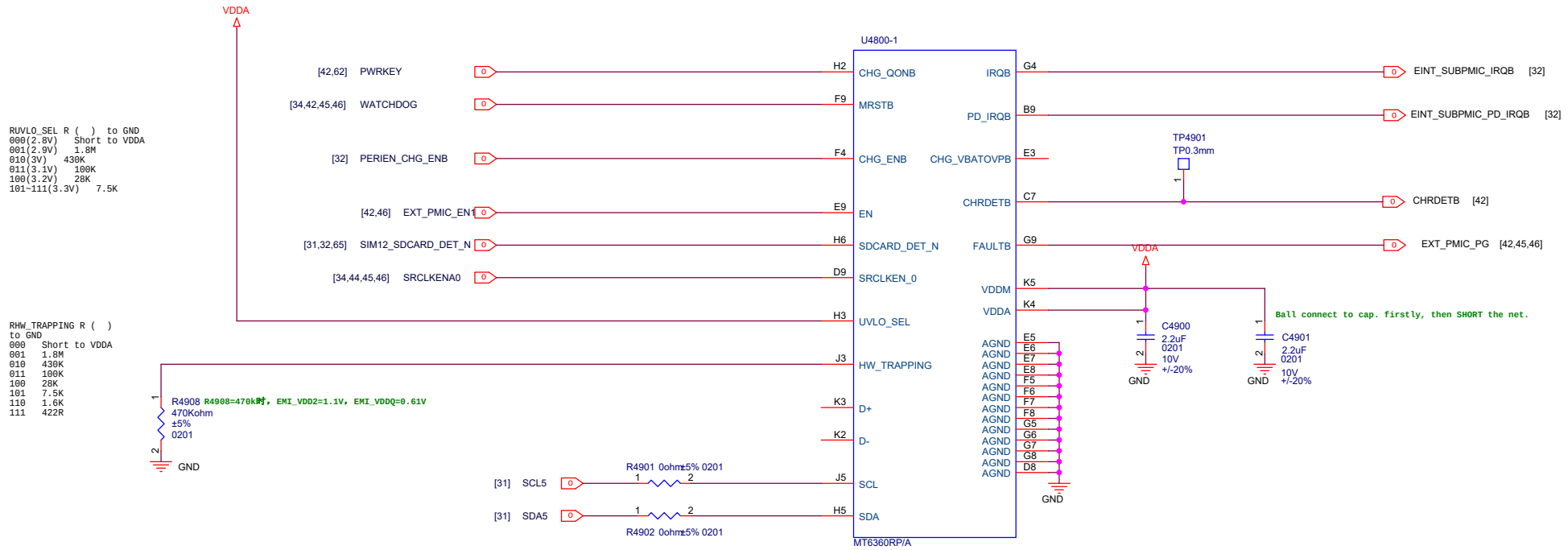

Refer to MT6360 Application Note
If SDA trace distance > 1001 mil,
adding a Rs on this trace is suggested.

Title	MT6360 General	
Size A3	Document Number MT6877	Rev P0
Date: Tuesday, August 03, 2021	Sheet	

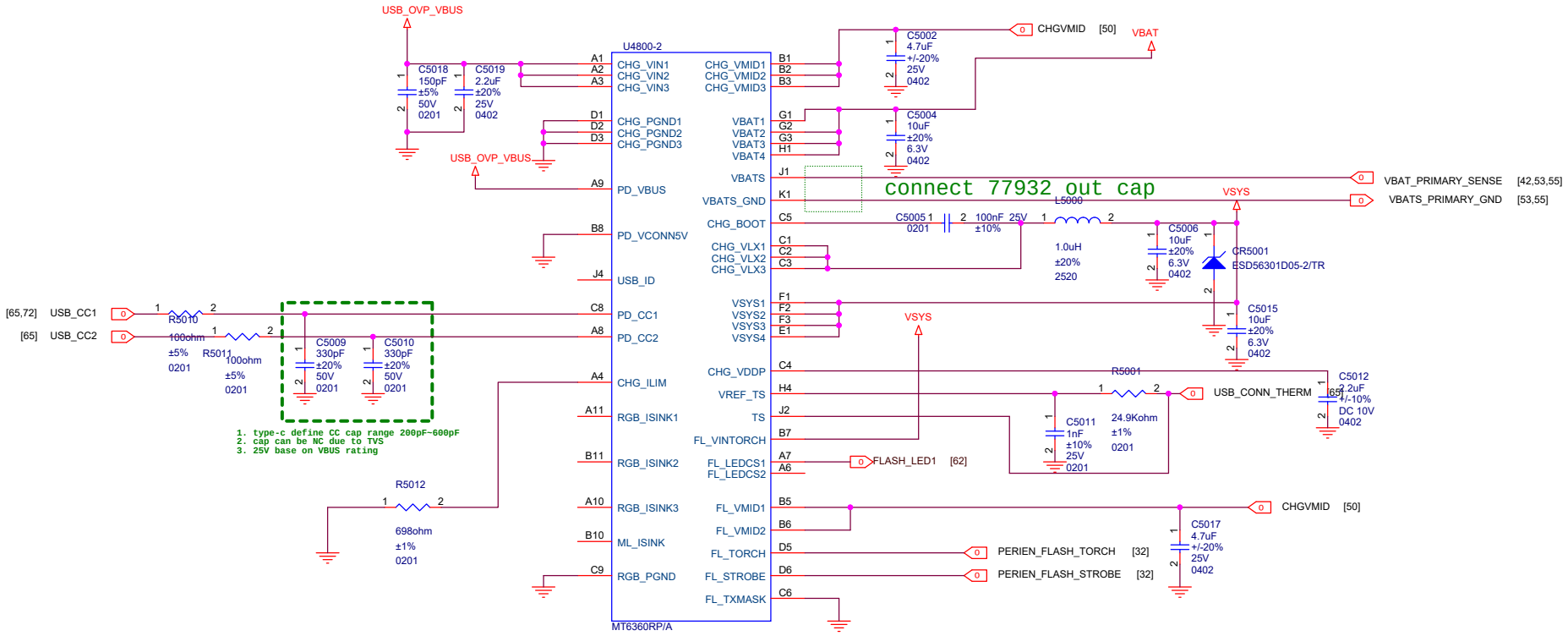

Title	MT636 CHARGER	
Size A3	Document Number MT6877	Rev P0
Date: Tuesday, August 03, 2021	Sheet	

MI PHONE		
Title	MT6873_5GA	
Size C	Document Number K16_MAIN	Rev
Date: Tuesday, August 03, 2021	Sheet of	

MI PHONE		
Title	MT6873_5GA	
Size C	Document Number K16_MAIN	Rev
Date: Tuesday, August 03, 2021	Sheet of	

PRIMARY BAT CON

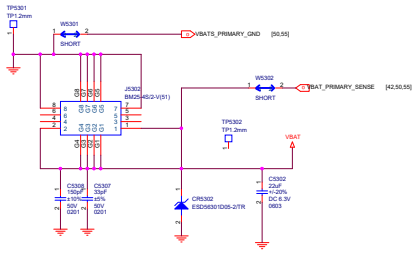

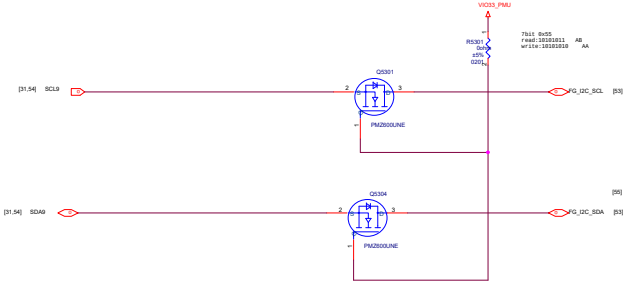

SECONDARY BAT CON

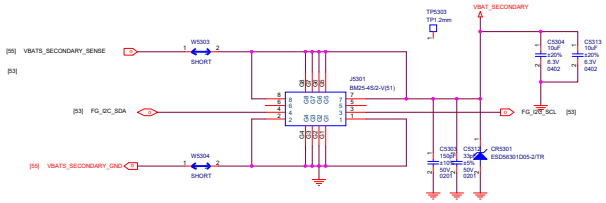

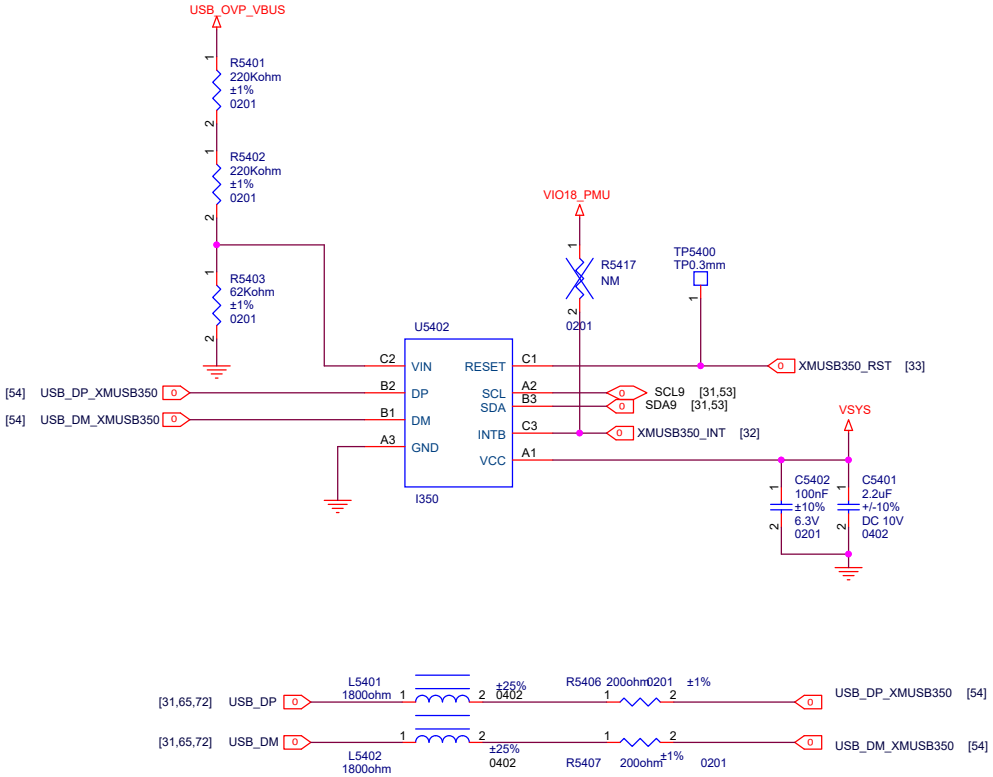

MI PHONE		
Title		
Size A3	Document Number K16_MAIN	Rev
Date: Tuesday, August 03, 2021	Sheet of	

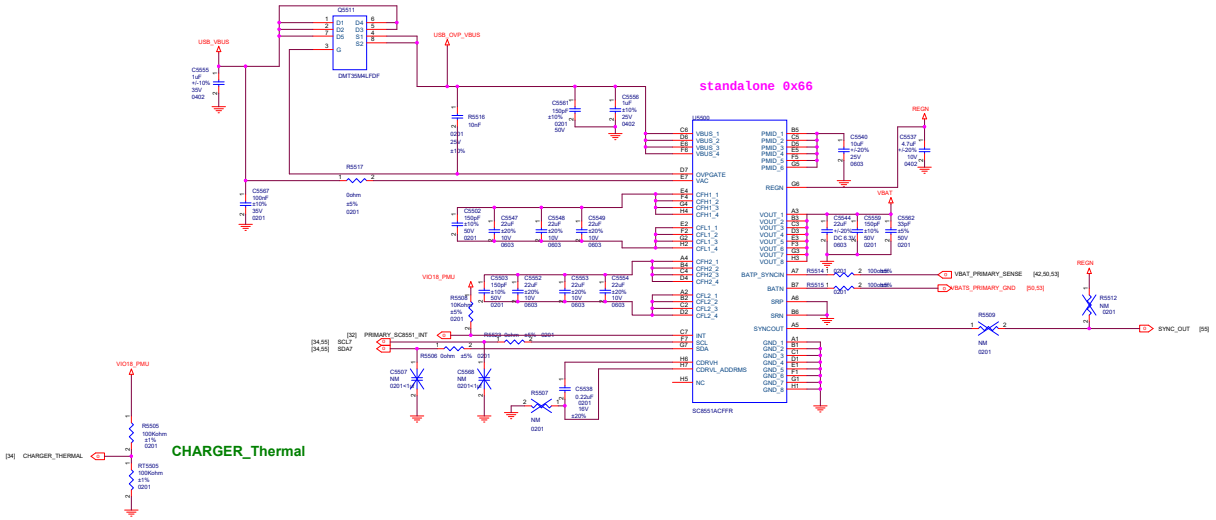
standalone 0x66
Q5511
DMT35M4LFDF
USB_VBUS
USB_OVP_VBUS
C5555 1uF +/-10% 35V 0402
R5516 10uF 0201 25V ±10%
C5561 150pF ±10% 0201 50V
C5556 1uF ±10% 25V 0402
R5517 0ohm ±5% 0201
C5567 100pF ±10% 35V 0201
U5500
SC8551ACFFR
VBUS_1
VBUS_2
VBUS_3
VBUS_4
OVPGATE
VAC
REGN
PMID_1
PMID_2
PMID_3
PMID_4
PMID_5
PMID_6
C5540 10uF +/-20% 25V 0603
C5537 4.7uF +/-20% 10V 0402
VBAT
VOUT_1
VOUT_2
VOUT_3
VOUT_4
VOUT_5
VOUT_6
VOUT_7
VOUT_8
C5544 22uF +/-20% DC:6.3V 0603
C5559 150pF ±10% 50V 0201
C5562 33pF ±5% 50V 0201
CFH1_1
CFH1_2
CFH1_3
CFH1_4
CFL1_1
CFL1_2
CFL1_3
CFL1_4
CFH2_1
CFH2_2
CFH2_3
CFH2_4
CFL2_1
CFL2_2
CFL2_3
CFL2_4
C5502 150pF ±10% 50V 0201
C5547 22uF ±20% 10V 0603
C5548 22uF ±20% 10V 0603
C5549 22uF ±20% 10V 0603
C5503 150pF ±10% 50V 0201
C5502 22uF ±20% 10V 0603
C5503 22uF ±20% 10V 0603
C5554 22uF ±20% 10V 0603
VIO18_PMU
R5508 10Kohm ±5% 0201
BATP_SYNCIN
BATN
SRP
SRN
SYNCOUT
R5514 1 0201 100mohm ±1%
R5515 1 0201 100mohm ±1%
VBAT_PRIMARY_SENSE [42,50,53]
VBATS_PRIMARY_GND [50,53]
R5509 NM 0201
SYNC_OUT [55]
R5512 NM 0201
[32] PRIMARY_SC8551_INT
[34,55] SCL7
[34,55] SDA7
R5503 0ohm ±5% 0201
R5506 0ohm ±5% 0201
C5597 NM 0201×1
C5598 NM 0201×1
R5507 NM 0201
C5538 0.22uF 0201 10V ±20%
INT
SCL
SDA
CDRVH
CDRVL_ADDRMS
NC
GND_1
GND_2
GND_3
GND_4
GND_5
GND_6
GND_7
GND_8
VIO18_PMU
R5505 100Kohm ±1% 0201
RT5505 100Kohm ±1% 0201
[34] CHARGER_THERMAL
CHARGER_Thermal

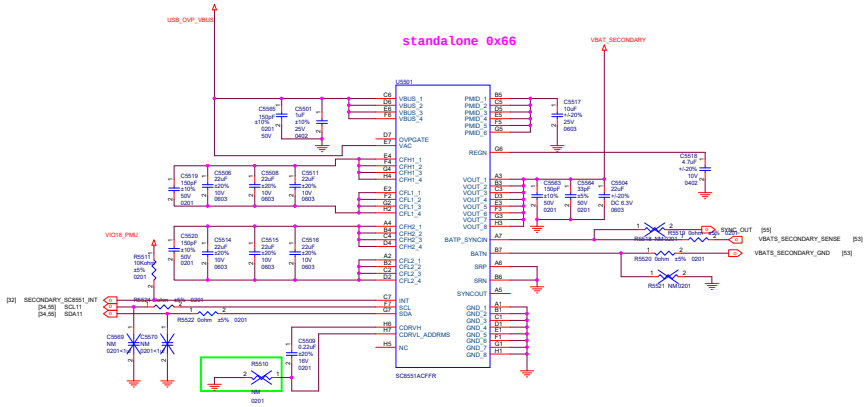
standalone 0x66
USB_OVP_VBUS
VBAT_SECONDARY
U5501
SC8551ACFFR
VBUS_1
VBUS_2
VBUS_3
VBUS_4
OVPGATE
VAC
REGN
PMID_1
PMID_2
PMID_3
PMID_4
PMID_5
PMID_6
C5585 150pF ±10% 0201 50V
C5501 1uF ±10% 25V 0402
C5517 10uF +/-20% 25V 0603
C5518 4.7uF +/-20% 10V 0402
VOUT_1
VOUT_2
VOUT_3
VOUT_4
VOUT_5
VOUT_6
VOUT_7
VOUT_8
C5563 150pF ±10% 50V 0201
C5564 33pF ±5% 50V 0201
C5504 22uF +/-20% DC:6.3V 0603
C5519 150pF ±10% 50V 0201
C5508 22uF ±20% 10V 0603
C5528 22uF ±20% 10V 0603
C5511 22uF ±20% 10V 0603
CFH1_1
CFH1_2
CFH1_3
CFH1_4
CFL1_1
CFL1_2
CFL1_3
CFL1_4
CFH2_1
CFH2_2
CFH2_3
CFH2_4
CFL2_1
CFL2_2
CFL2_3
CFL2_4
C5520 150pF ±10% 50V 0201
C5514 22uF ±20% 10V 0603
C5515 22uF ±20% 10V 0603
C5516 22uF ±20% 10V 0603
VIO18_PMU
R5511 10Kohm ±5% 0201
BATP_SYNCIN
BATN
SRP
SRN
SYNCOUT
SYNC_OUT [55]
R5519 0ohm ±5% 0201
VBATS_SECONDARY_SENSE [53]
VBATS_SECONDARY_GND [53]
R5520 0ohm ±5% 0201
R5521 NM 0201
[32] SECONDARY_SC8551_INT
[34,55] SCL11
[34,55] SDA11
R5521 0ohm ±5% 0201
R5522 0ohm ±5% 0201
C5569 NM 0201×1
C5570 NM 0201×1
R5510 NM 0201
C5539 0.22uF ±20% 10V 0201
INT
SCL
SDA
CDRVH
CDRVL_ADDRMS
NC
GND_1
GND_2
GND_3
GND_4
GND_5
GND_6
GND_7
GND_8

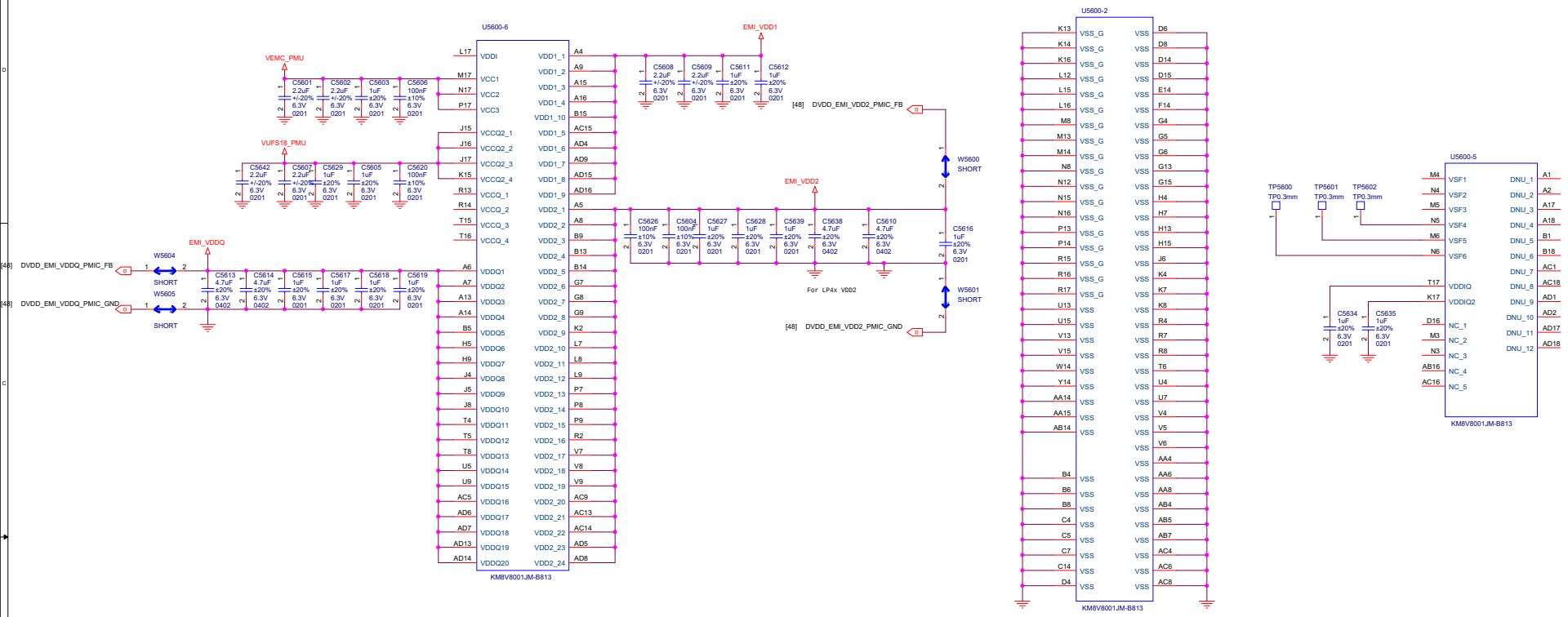

Title	K16_MAIN
Size A2	Document Number MEMORY POWER
Rev	P0
Date: Tuesday, August 03, 2021	Sheet

UFS 2.2

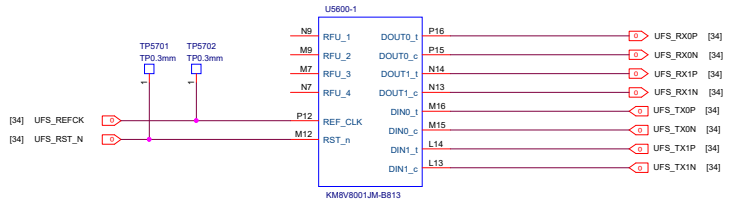

LPDDR4/4x

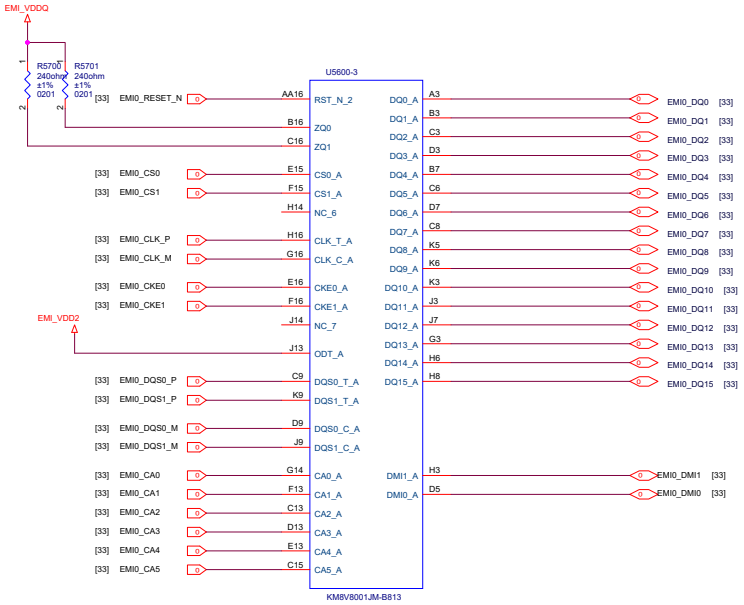

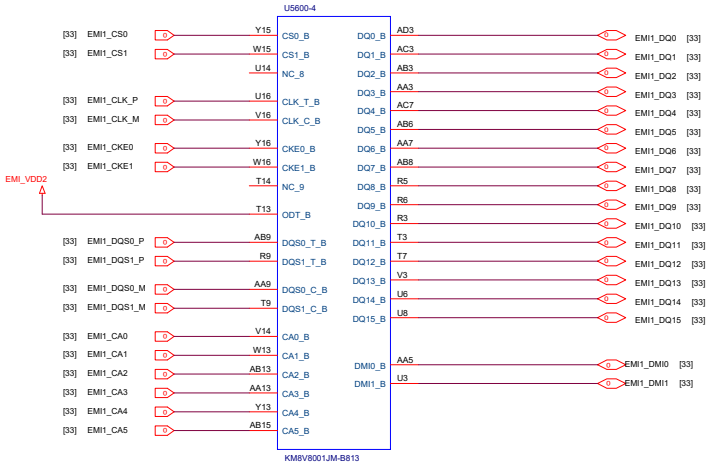

Title	K16_MAIN	
Size A2	Document Number MEMORY UFS/LPDDR4X	Rev P0
Date: Tuesday, August 03, 2021	Sheet	

MI PHONE		
Title K16_MAIN		
Size A3	Document Number Reserved(for WCD)	Rev P0
Date: Tuesday, August 03, 2021	Sheet of	

MI PHONE		
Title K16_MAIN		
Size A3	Document Number Reserved(for WCD)	Rev P0
Date: Tuesday, August 03, 2021	Sheet of	

SPK

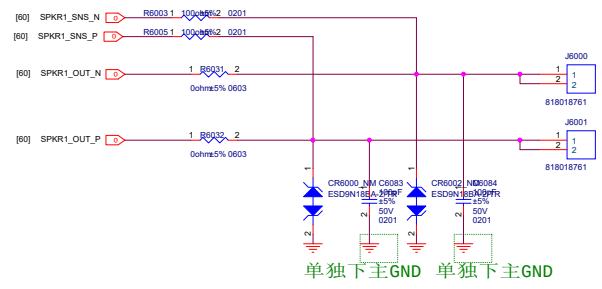

Second MIC

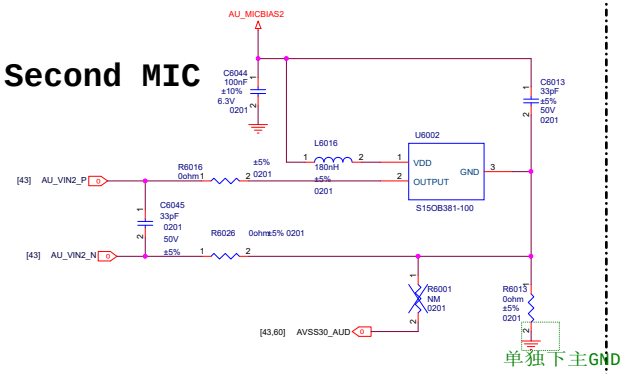

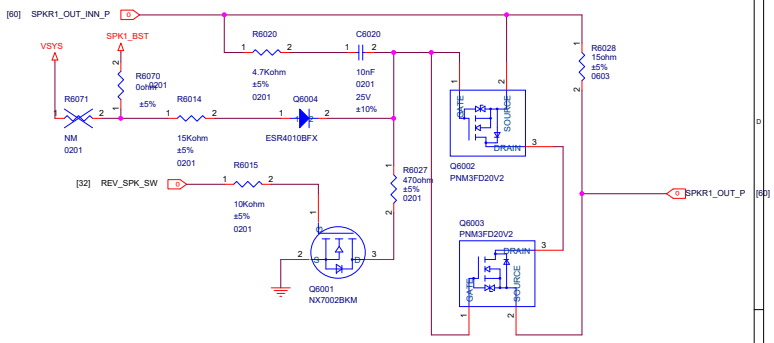

SPKR PA

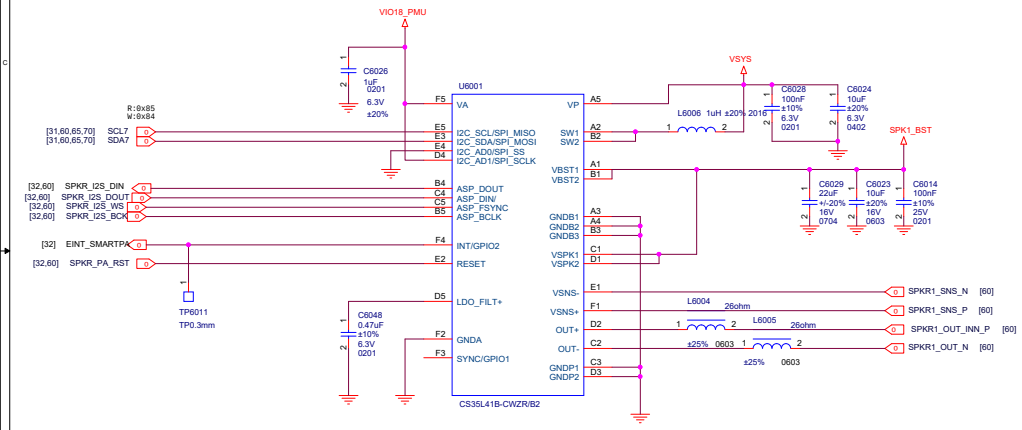

SPK2 PA

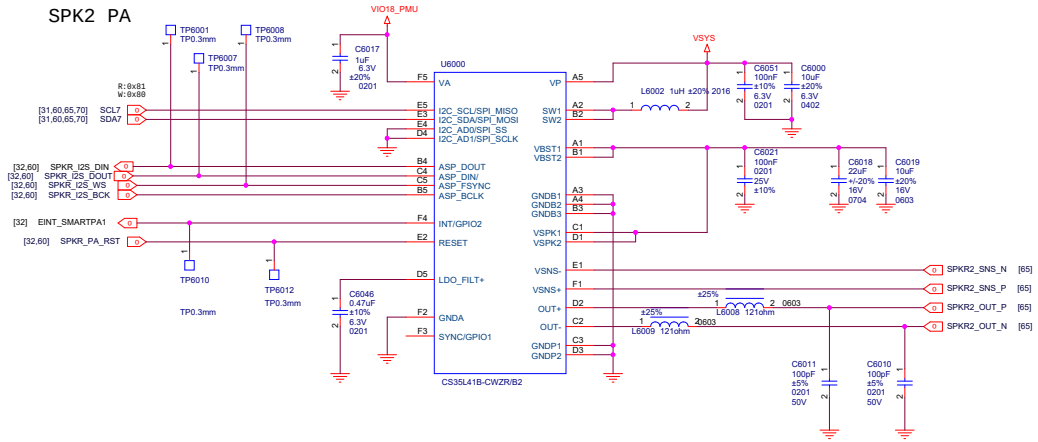

HEADSET

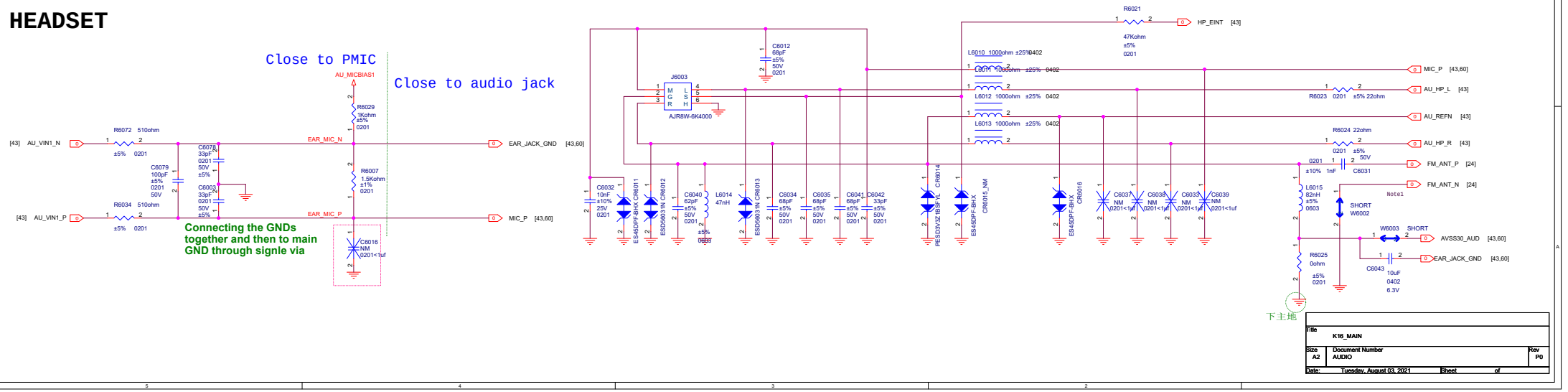

Title	K16_MAIN	
Size A2	Document Number AUDIO	Rev P0
Date: Tuesday, August 03, 2021	Sheet of	

A+G1

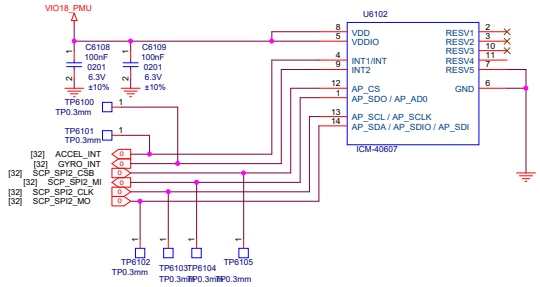

HAPTICS

Sidekey

音量键PCB 上要加丝印

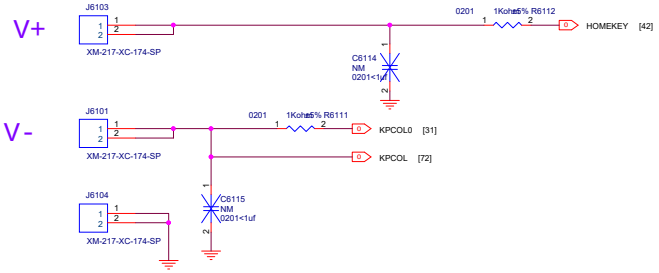

Title	K16_MAIN	
Size A2	Document Number SENSOR	Rev P0
Date: Tuesday, August 03, 2021	Sheet	

COMPASS

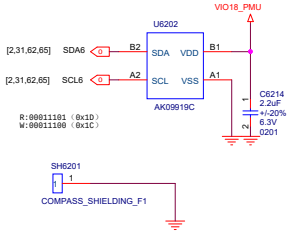

L-sensor +FLASH

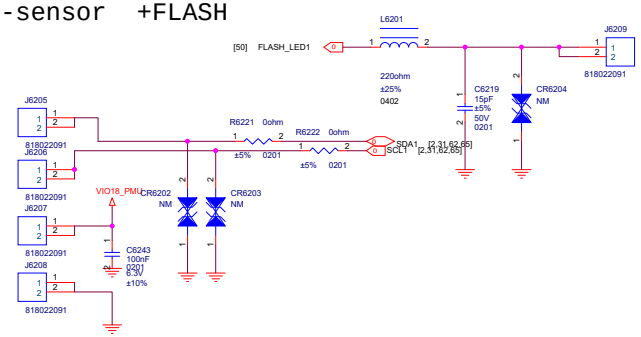

FLASH_Thermal

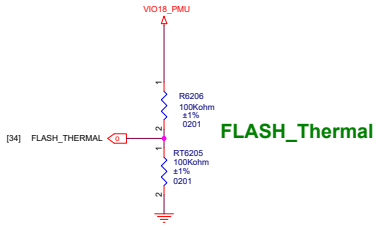

INFRARED

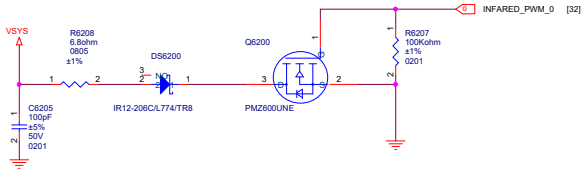

L_SENSOR TOP

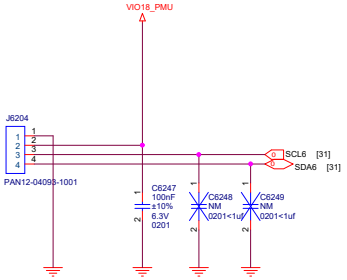

FP+PWRKEY

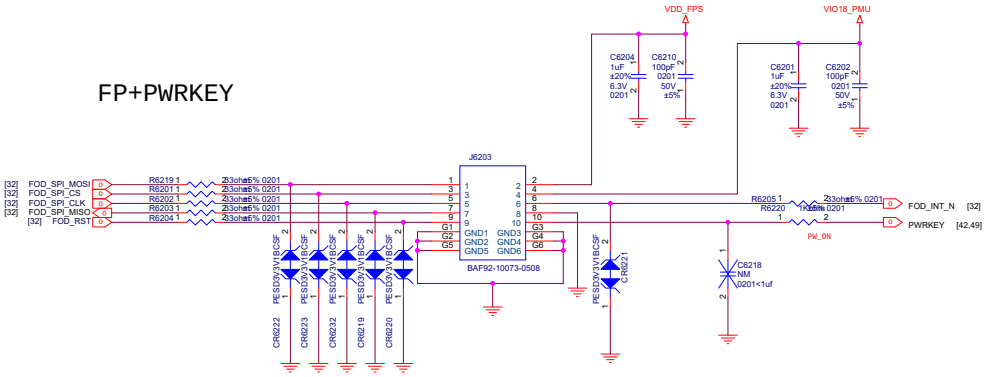

Title	K16_MAIN	
Size A2	Document Number SENSOR-2	Rev P0
Date: Tuesday, August 03, 2021	Sheet	of

MI PHONE		
Title K16_MAIN		
Size A4	Document Number	Rev
Date:	Sheet of	

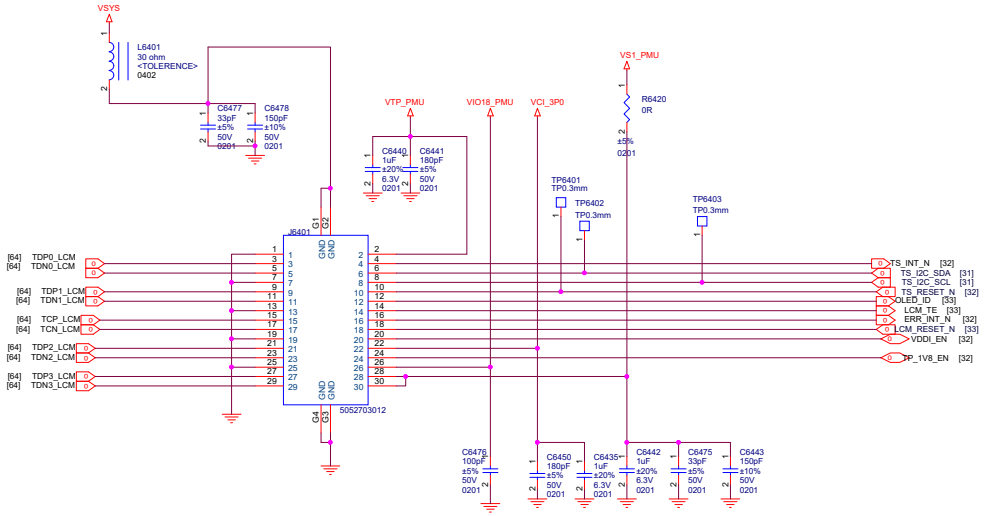

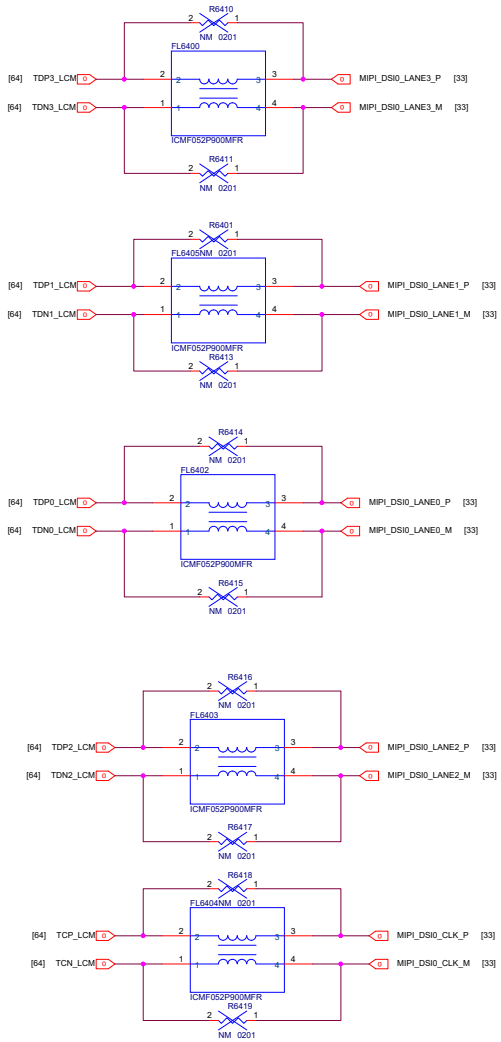

Title	K16_MAIN	
Size A2	Document Number AMOLED	Rev P0
Date: Tuesday, August 03, 2021	Sheet	

BTB CONNECTOR

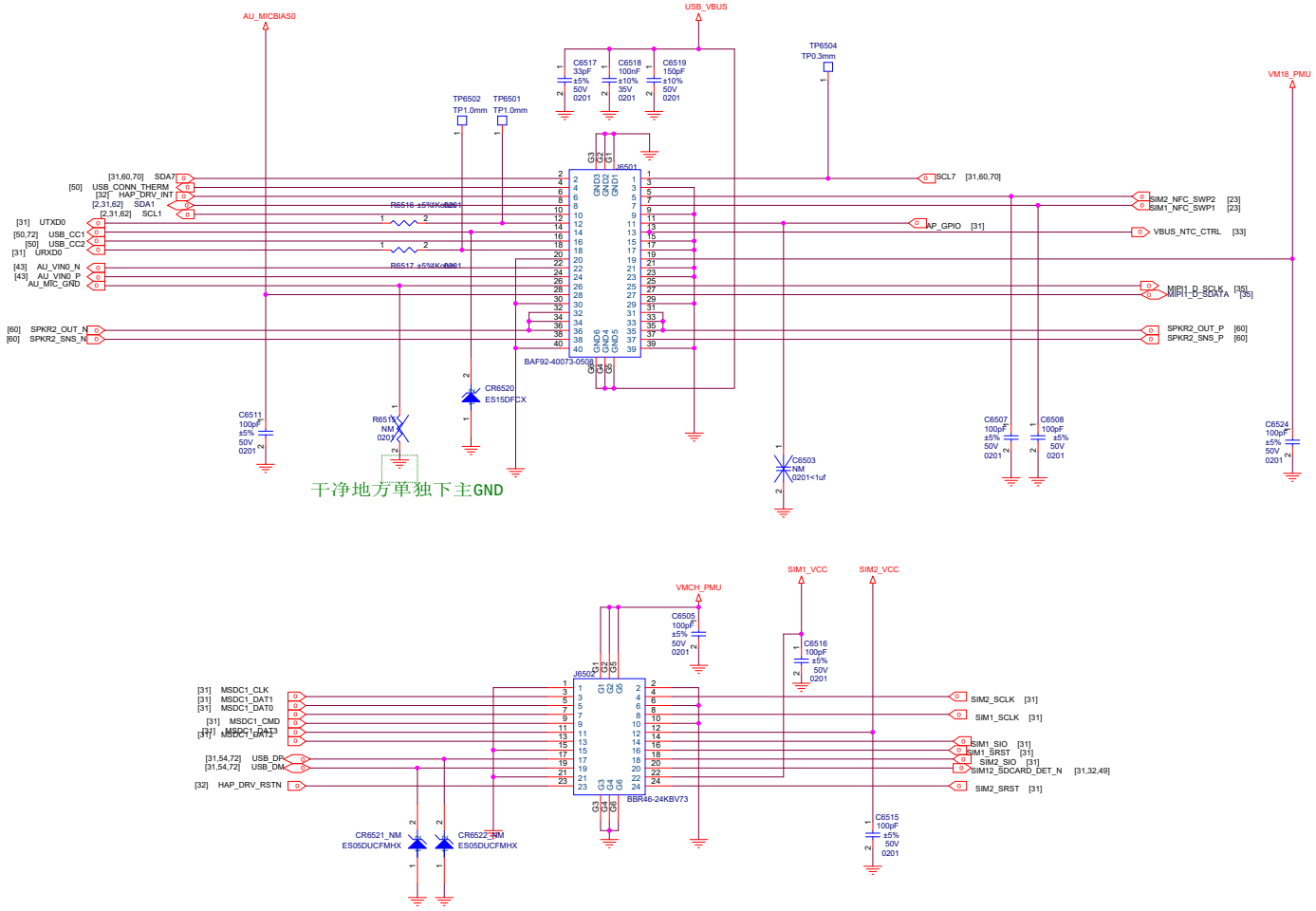

Title	K16 MAIN		
Size A2	Document Number BTB		Rev P0
Date: Tuesday, August 03, 2021		Sheet	

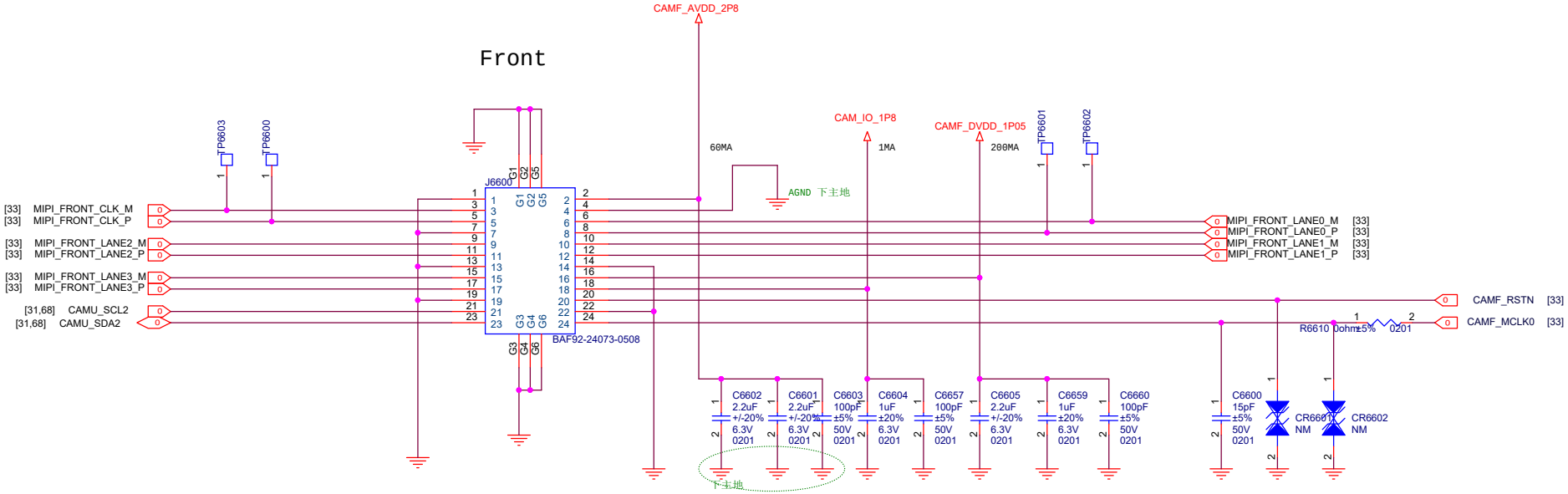

Title	K16_MAIN	
Size A3	Document Number Reserved(for Analog FM)	Rev P0
Date: Tuesday, August 03, 2021	Sheet	

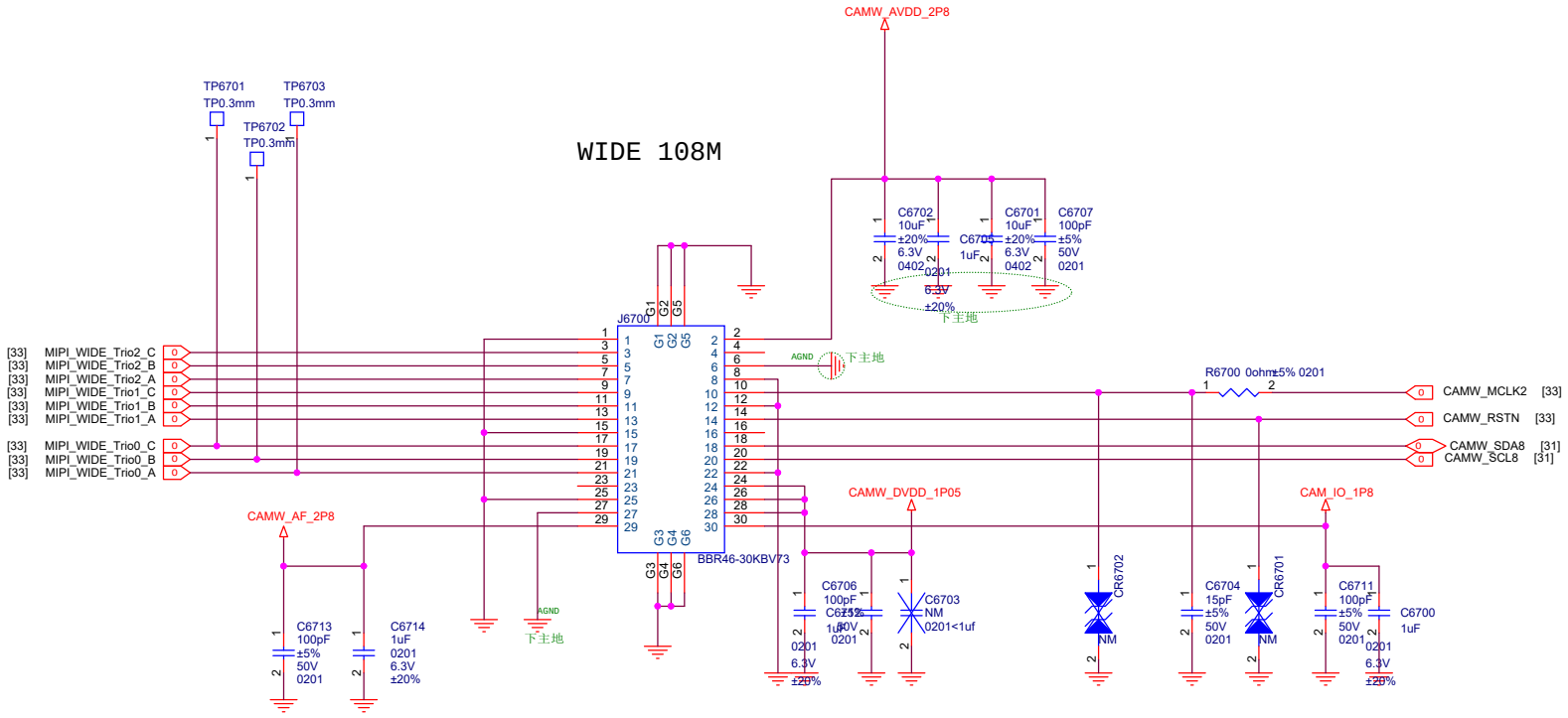

Title	K16_MAIN	
Size A3	Document Number WIDE&TELE CAMERA	Rev P0
Date: Tuesday, August 03, 2021	Sheet	

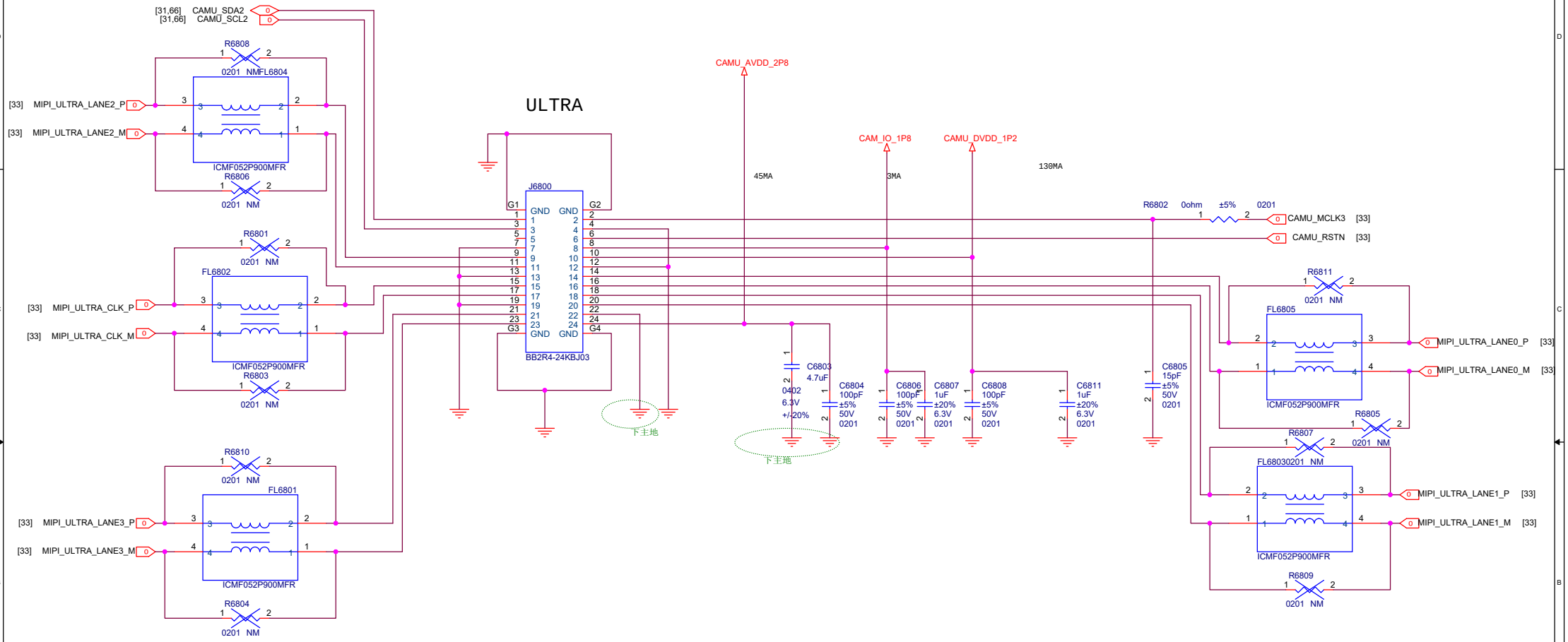

Title	K16_MAIN	
Size A3	Document Number ULTRA CAMERA	Rev P0
Date: Tuesday, August 03, 2021	Sheet	

2M MACRO

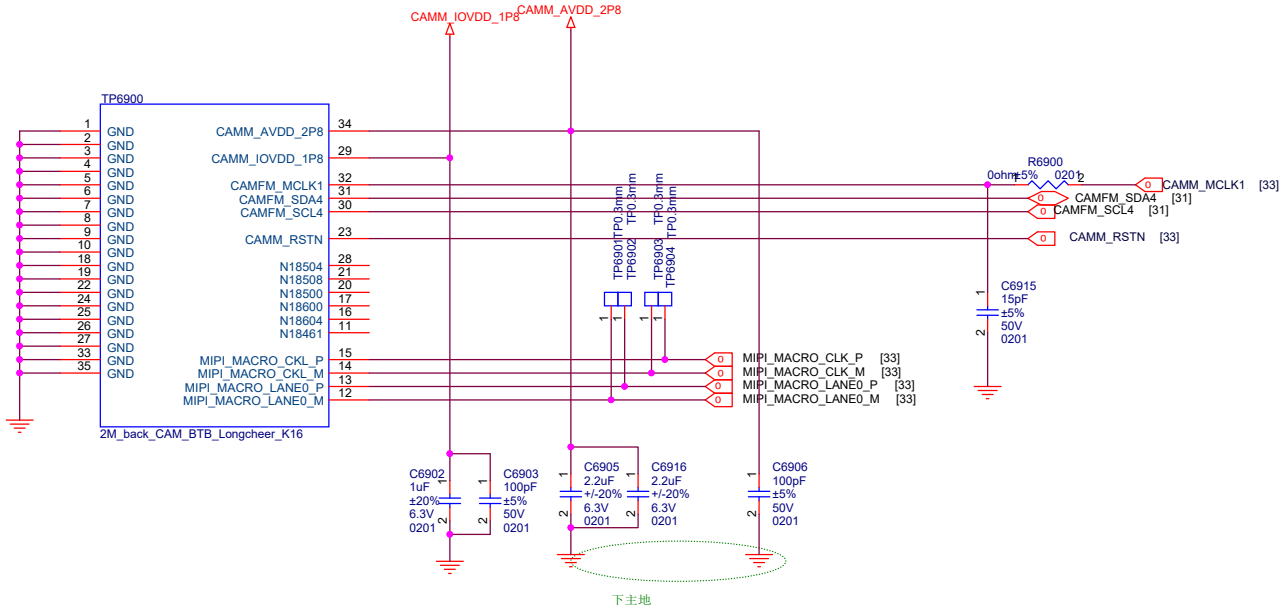

Title	K16_MAIN	
Size A3	Document Number ULTRA CAMERA	Rev P0
Date: Tuesday, August 03, 2021	Sheet	

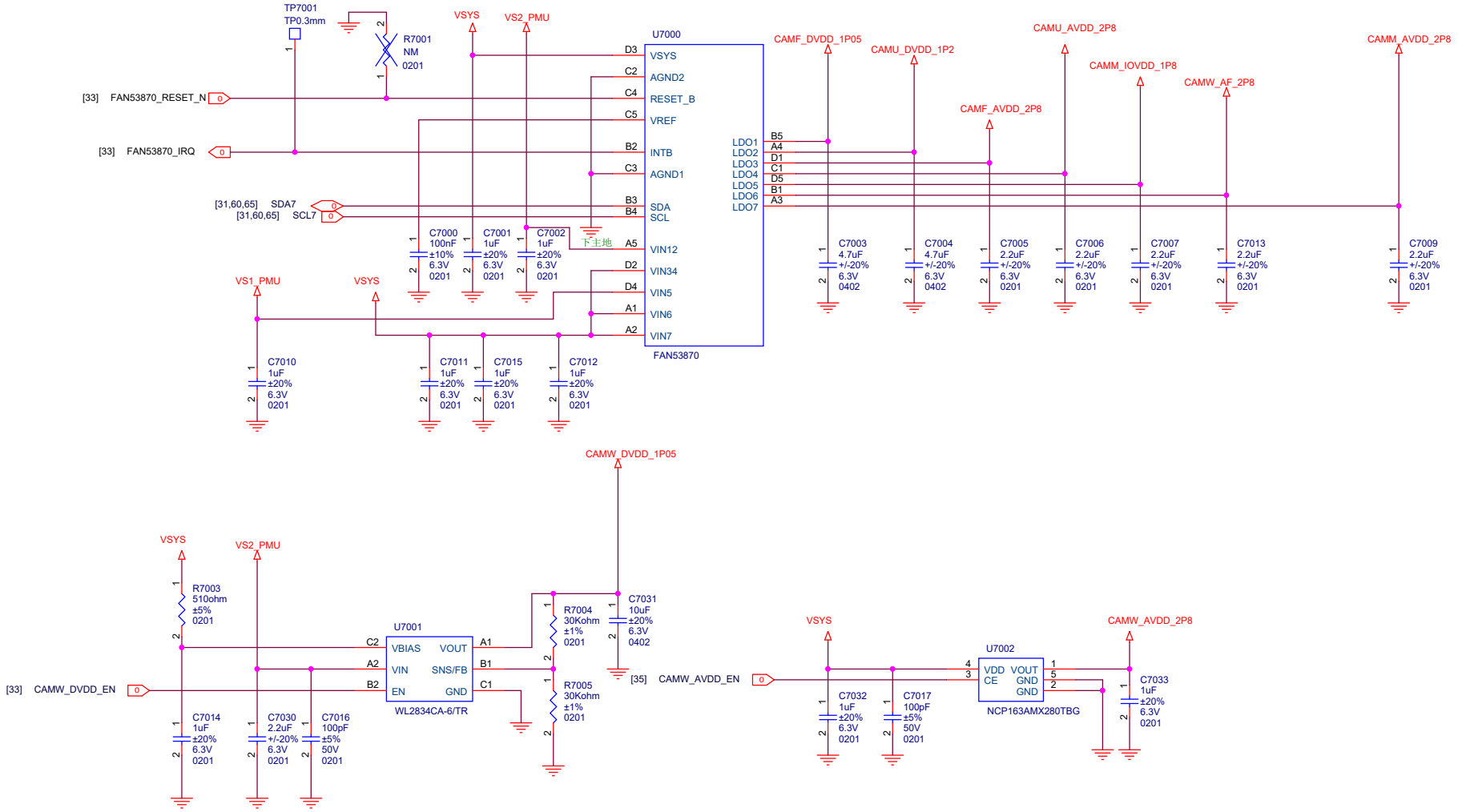

MI PHONE		
Title: K16_MAIN		
Size: A3	Document Number: CAMERA LDOs	Rev: P0
Date: Tuesday, August 03, 2021	Sheet of	

Title	K16_MAIN
Size B	Document Number SIM
Rev	P0
Date:	Tuesday, August 03, 2021
Sheet	71 76

Schematic design notice of "90_DEBUG_IO" page.

Note 90-1: UART Default support : UART0,
JTAG Default support : AP JTAG/MD_IO_JTAG

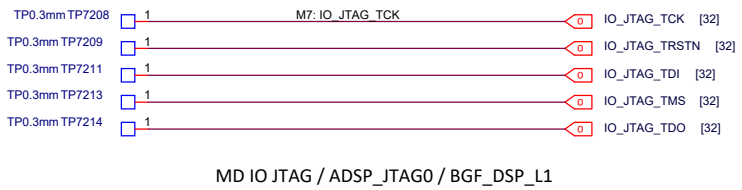

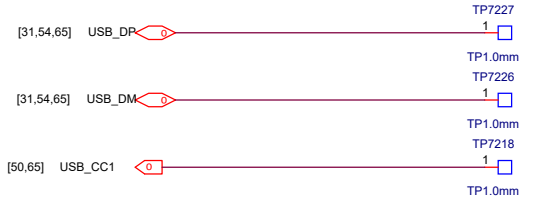

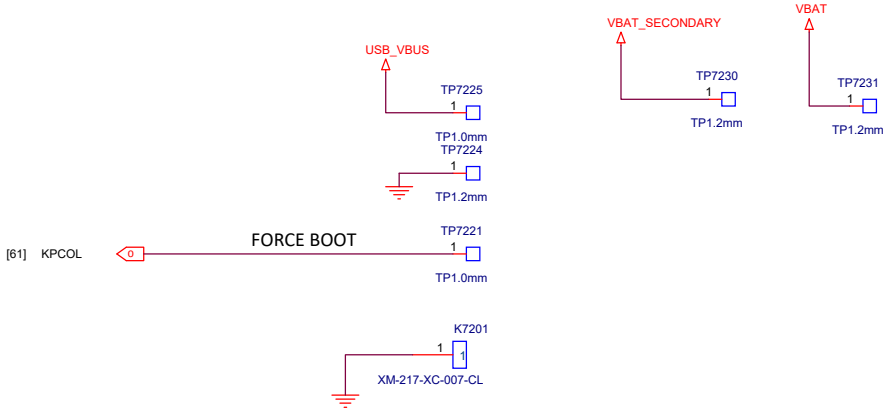

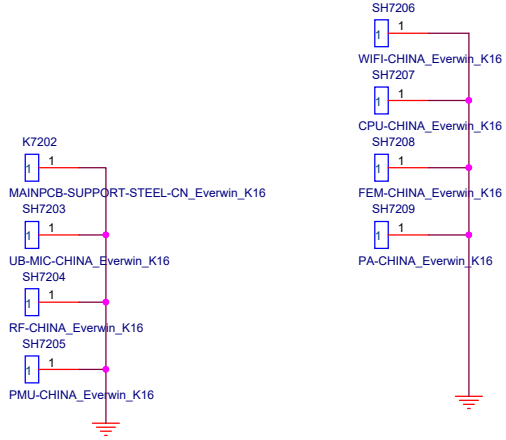

Title	K16_MAIN	
Size A3	Document Number <Doc>	Rev P0
Date: Tuesday, August 03, 2021	Sheet	